Westronic

WS2000 – TABS

994-T017 Rev I September, 2007

Technical Manual

Technical Manual

Westronic Systems, Inc.
a Mediation Technology company

No part of this publication may be reproduced, stored on a retrieval system, or transmitted, in any form or by any means electronic, mechanical, photocopying, recording, or otherwise, without the prior written permission of WESTRONIC. The use of trademarks or other designations is for reference purposes only.

NOTICE

WESTRONIC makes no warranties about this document. WESTRONIC reserves the right to make hardware and software changes to the product described within this document without prior notice and without obligation to notify any person of such revision or change.

REGULATORY INFORMATION

WARNING: This equipment generates, uses, and can radiate radio frequency energy, and, if not installed and used in accordance with the installation manual, may cause interference to radio communications. It has been tested and found to comply with the limits for a Class A digital device pursuant to Part 15, Subpart J of the FCC rules, which are designed to provide reasonable protection against such interference when operated in a commercial environment. Operation of the equipment in a residential area is likely to cause interference, in which case the user, at his own expense, will be required to take whatever measures may be required to correct the interference.

CAUTION: Changes or modifications not expressly approved by Westronic could void the user's authority to operate this equipment.

The FCC label can be found on the right side of the shelf assembly. The label includes the following information:

This device complies with Part 15 of the FCC Rules.

Operation is subject to the following two conditions:

- This device may not cause harmful interference, and
- This device must accept any interference received, including interference that may cause undesired operation.

Westronic Systems, Inc.
a Mediation Technology company

Tel: 403-250-8304 | **Fax:** 403-263-2174
Technical Support: 403-250-8304
E-Mail: info@westronic.com

View Remote Alarm Monitoring and Management Products at:
http://www.westronic.com

200, 550 71 Avenue SE
Calgary, Alberta T2H 0S6 Canada

© 2007 Westronic Systems, Inc.
Printed in Canada

Revision History

Rev Level	Issue Date	Reason for Reissue
A	January, 1992	First Release
A1	July, 1992	Modem and Cable Changes
B	December, 1995	New Format
C	March, 1997	Combine all relevant TABS documents into one User Guide
D	June, 1997	Add Auto-parity and Config Display/Address Features
E	October, 1999	Correct Various Document Errors; Change Format to FrameMaker, Format and Logo Changes
F	April, 2001	Format and Logo Changes, Revert to Word Format, Correct Pinout Information for WS2000 Backplane TB1 and Strapping for Z4 of 202TModem
G	August, 2002	Updated Westronic footer information. Updated Table 3-4.
H	June, 2005	Updated address and fax
I	September, 2007	Updated Address.

© 2007 Westronic Systems, Inc.

This page intentionally left blank.

Table of Contents

1 Product Description 1-1

1.1 Overview 1-1

1.2 WS2000 Configurations 1-3

1.3 Other Products From Westronic Systems 1-4
1.3.1 WS1000 1-4
1.3.2 C1000 1-5
1.3.3 WS3000 1-6

2 Hardware Description 2-1

2.1 Front-Panel Indicators and Controls 2-1
2.1.1 Indicators 2-1
2.1.2 Pushbuttons 2-2
2.1.3 Modem Output Level Adjustment Control 2-3

2.2 Interfaces 2-3
2.2.1 Discrete Interfaces 2-3
2.2.2 Serial Interfaces 2-4

2.3 Configuration and Diagnostics 2-4

2.4 Optional External Accessories 2-5
2.4.1 External Discrete Expanders 2-5
2.4.2 Rack-Mount Modem 2-6
2.4.3 External Alarm Panel 2-6
2.4.4 Universal Annunciator Panel 2-6
2.4.5 Telzon Interface Assembly 2-7
2.4.6 Front-Access Wire-Wrap Assembly 2-7
2.4.7 Rear-Access Wire-Wrap Assembly 2-8

2.5 Specifications 2-8
2.5.1 Electrical 2-8
2.5.2 Environmental 2-8
2.5.3 Mechanical 2-9
2.5.4 Interfaces 2-10

3 Installation 3-1

3.1 Overview 3-1

3.2 Handling Considerations and Precautions 3-1

3.3 Module Substitution 3-2

3.4 Installation Procedures 3-3
3.4.1 Installing the WS2000 3-3
3.4.2 Inspecting the WS2000 3-4
3.4.3 Configuring the WS2000 3-4
3.4.4 Cabling the WS2000 3-18
3.4.5 Powering the WS2000 3-52

3.5 Installation Check List 3-55

4 Software Configuration 4-1

4.1 Introduction 4-1

4.2 Configuration Overview 4-1
4.2.1 Scan Points 4-1
4.2.2 Process Lists 4-1
4.2.3 Control Points 4-2
4.2.4 Serial Interfaces 4-3
4.2.5 Extended TABS Address Frame Format 4-6
4.2.6 TABS Analog Processing 4-8
4.2.7 TABS Line Performance Monitoring 4-10
4.2.8 Display Mapping 4-12

4.3 Configuration Templates 4-13
4.3.1 Serial Channel Configuration Template 4-14
4.3.2 Display Configuration Template 4-14
4.3.3 Process List Configuration Template 4-15
4.3.4 Analog Configuration Template 4-16
4.3.5 Performance Monitoring Template 4-16

4.4 WS2000 Step-by-Step Configuration 4-17
4.4.1 Configuring the Maximum Number of Displays and TABS Addresses 4-17
4.4.2 Configuring the WS2000 TABS Address 4-18
4.4.3 Configuring Serial Channels 4-19
4.4.4 Configuring Process Lists 4-20
4.4.5 Configuring Output Displays 4-23
4.4.6 Configuring Analog Inputs 4-25
4.4.7 Configuring Pulse Accumulators 4-26
4.4.8 Verifying the New Configuration 4-28

4.5 Configuration Check List 4-30

5 Maintenance Interface 5-1

5.1 Interface Hardware 5-1

5.2 Cabling 5-1

5.3 Wesmaint Functions 5-2
5.3.1 Wesmaint Unit Key Layout 5-3
5.3.2 ASCII Terminal Key Layout 5-3
5.3.3 Operator Prompts 5-4
5.3.4 Function Menus 5-5

5.4 Display Functions 5-6
5.4.1 Version Number 5-7
5.4.2 Current Status 5-7
5.4.3 Raw Status 5-9
5.4.4 Status Memory 5-11
5.4.5 Com Status 5-12
5.4.6 Latching Control 5-14
5.4.7 Momentary Control 5-16
5.4.8 Analog Inputs 5-18
5.4.9 Accumulator Inputs 5-19

5.5 Command Functions 5-21
5.5.1 Wesmaint Mode 5-22
5.5.2 Configure Displays and Addresses 5-23
5.5.3 Configure Displays 5-25

5.5.4 Configure Process Attribute Lists 5-30
5.5.5 Serial Channel Interface 5-34
5.5.6 TABS Remote Address 5-38
5.5.7 Configure Analogs 5-39
5.5.8 Configure Accumulators 5-41
5.5.9 Carrier Test 5-43
5.5.10 Loopback Test 5-44
5.5.11 Logout 5-46
5.5.12 Alter Password 5-47
5.5.13 Initialize DB 5-49

Appendix A

List of Figures

Figure 1-1 WS2000 TABS 1-1
Figure 1-2 Overview of WS2000 Capabilities 1-2
Figure 2-1 WS2000 Front Panel 2-1
Figure 2-2 Form A and Form C Control Output Configuration 2-3
Figure 2-3 Expansion Using Discrete Expanders 2-5
Figure 3-1 Electrostatic Discharge (ESD) Label 3-1
Figure 3-2 WS2000 TABS 3-3
Figure 3-3 Strap Arrangements for Type 1 Main Board 3-5
Figure 3-4 Strap Arrangements for Type 2 Main Board 3-6
Figure 3-5 Strap Arrangements for Type 3 Main Board 3-7
Figure 3-6 Strap Arrangements for Type 4 Main Board 3-8
Figure 3-7 202T Modem Board 3-9
Figure 3-8 Analog Input and Scaler Adapter Panel 3-11
Figure 3-9 Scaler Adapter Layout and Schematic 3-12
Figure 3-10 Pulse Accumulator Board 3-14
Figure 3-11 WS2000 Backplane Showing Rear Connectors and Jumper Block Locations 3-15
Figure 3-12 Functional View of Z6 and Z8 Strapping 3-16
Figure 3-13 Z6/Z8 Form A/Form C Jumper Strap Arrangements 3-16
Figure 3-14 Overview of the WS2000 System Connections 3-19
Figure 3-15 Front-Panel Connector JB3 3-20
Figure 3-16 Rear View of WS2000 Serial Port Connectors (Methode) 3-21
Figure 3-17 Host Port Modem Connections 3-21
Figure 3-18 Serial Port Interface Connections for WS2000 3-23
Figure 3-19 Rear View of the WS2000 Discrete Connectors 3-25
Figure 3-20 WS2000 to Discrete Expander Interface Connections 3-28

Figure 3-21 WS2000 Rear Connector TB1 3-30
Figure 3-22 Front View of the Rack-Mount Modem 3-31
Figure 3-23 Rack-Mount Modem Main Board 3-32
Figure 3-24 Rack-Mount Modem TB1 Pinouts 3-32
Figure 3-25 WS2000 and Rack-Mount Modem Interconnections 3-34
Figure 3-26 External Audible/Visual Alarm Panel 3-35
Figure 3-27 Universal Annunciator panel, Front and Rear Panels 3-36
Figure 3-28 Telzon Block 3-38
Figure 3-29 Remote and Telzon Termination Block Interconnection 3-39
Figure 3-30 Telzon Termination Block Wire-Wrap Designations 3-41
Figure 3-31 Telzon Pinouts and Functions 3-42
Figure 3-32 Front-Access Wire-Wrap Kit (Cover Removed) 3-43
Figure 3-33 Front-Access Wire-Wrap Panel Connections 3-44
Figure 3-34 WS2000 with Rear-Access Wire-Wrap kit 3-48
Figure 3-35 Rear-Access Serial termination Wire-Wrap Connector Pinouts 3-49
Figure 3-36 Rear-Access 50-Pin Wire-Wrap Connector on J1/J2 3-50
Figure 4-1 Extended TABS Level 2 Header 4-7
Figure 4-2 Checksum Miscalculation Byte 4-7
Figure 4-3 Extended (Left) and Normal (Right) TABS Addressing Formats 4-8
Figure 4-4 Analog Display Format 4-9
Figure 4-5 Scan (Alarm/Status) and Control Point Mapping 4-12
Figure 5-1 WS2000 Wesmaint Maintenance Unit 5-3
Figure 5-2 Display Function Commands 5-6
Figure 5-3 Command Functions 5-21

List of Tables

Table 1-1 WS2000 TABS Equipment Part Numbers 1-3
Table 3-1 Strap Arrangements for Type 1 Main Board 3-5
Table 3-2 Strap Arrangements for Type 2 Main Board 3-6
Table 3-3 Strap Arrangements for Type 3 Main Board 3-7
Table 3-4 Strap Arrangements for Type 4 Main Board 3-8
Table 3-5 202T Modem Card Jumper Blocks and Functions 3-9
Table 3-6 202T Modem Mode Operation Type (Z2 Jumper Block) 3-10
Table 3-7 202T Modem Receive Signal Sensitivity (Z3 Jumper Block) 3-10
Table 3-8 Recommended R1/R2 Values for Analog Scaler Panel 3-13

Table 3-9 Z5 WPIB Address Jumper Strap Settings 3-17
Table 3-10 Z1, Z2, Z3 Jumper Strap Arrangements for RS-422/RS-485 Receiver Termination 3-18
Table 3-11 Cabling Interface Data for Serial Input/Output 3-22
Table 3-12 Pinouts for WS2000 Discrete Interface Connector J1 3-26
Table 3-13 Pinouts for WS2000 Discrete Interface Connector J2 3-27
Table 3-14 Westronic Peripheral Interface Bus (WPIB) Cable Part Numbers 3-29
Table 3-15 Pinout Information for the Westronic Peripheral Interface Bus (WPIB) P7 3-29
Table 3-16 Pulse Accumulator Input Connections 3-31
Table 3-17 Factory Strap Options for Rack-Mount Modem Main Board 3-32
Table 3-18 Connector J1 DB25 Pinouts 3-33
Table 3-19 Connection Between Rack-Mount Modem and WS2000 Units 3-33
Table 3-20 Audible/Visual Alarm Panel Pinouts for TB1 and P5 IN/OUT 3-35
Table 3-21 Alarm Summary Input Connections 3-37
Table 3-22 Telzon Block Component Part Numbers 3-38
Table 3-23 Telzon Serial Connector Identification and Wire Colors 3-40
Table 3-24 Front-Access Wire-Wrap Kit (PN 533-T032) Components 3-43
Table 3-25 Power/Auxiliary Host Port Connections Between WS2000 and Front-Access Wire-Wrap Panel Connector A 3-44
Table 3-26 Serial Port Connections for Front Wire-Wrap Panel Connector B 3-45
Table 3-27 J1 Discrete Input/Output Connections from Front Wire-Wrap Panel Connector C 3-46
Table 3-28 J2 Discrete Input/Output Connections from Front Wire-Wrap Panel Connector D 3-47
Table 3-29 Rear-Access Wire-Wrap Kit (PN 585-T034) Components 3-48
Table 3-30 Serial Port Connections for the Rear-Access Wire-Wrap Assembly 3-49
Table 3-31 J1 Discrete I/O Connections for the Rear-Access Wire-Wrap Assembly 3-50
Table 3-32 J2 Discrete I/O Connections for the Rear-Access Wire-Wrap Assembly 3-51
Table 3-33 WS2000 Fusing Requirements 3-52
Table 5-1 Front Panel Wesmaint Connector JB3 5-1
Table 5-2 VT100 Maintenance Connections 5-2
Table 5-3 Wesmaint-ASCII Terminal Functional Equivalence 5-4
Table 5-4 Pinout Wiring for the RS-422 and RS-232 Loopback Connectors 5-45

List of Procedures

Procedure 4-1 Configuring the Maximum Number of Displays and TABS Addresses 4-17
Procedure 4-2 Configuring the WS2000 TABS Address 4-18
Procedure 4-3 Configuring the Serial Channels 4-19
Procedure 4-4 Configuring a Process List 4-20

Procedure 4-5 Configuring the Output Displays 4-23
Procedure 4-6 Configuring Analog Inputs 4-25
Procedure 4-7 Configuring Pulse Accumulator Inputs 4-26
Procedure 4-8 Verifying a New Configuration 4-28
Procedure 5-1 Viewing the WS2000 Software Load Version 5-7
Procedure 5-2 Viewing the Current Status of WS2000 Input Data 5-8
Procedure 5-3 Viewing the Raw Status of WS2000 Input Data 5-10
Procedure 5-4 Viewing the Status Memory 5-12
Procedure 5-5 Viewing Communication Status 5-13
Procedure 5-6 Latching Control Outputs 5-15
Procedure 5-7 Initiating Momentary Control Commands 5-17
Procedure 5-8 Viewing Analog Inputs 5-18
Procedure 5-9 Viewing Accumulator Inputs 5-20
Procedure 5-10 Changing Wesmaint Modes 5-22
Procedure 5-11 Configuring the Maximum Number of Displays and Addresses 5-25
Procedure 5-12 Configuring an Output Display 5-28
Procedure 5-13 Configuring Process Attribute Lists 5-31
Procedure 5-14 Configuring the Serial Channel Interface 5-36
Procedure 5-15 Configuring the WS2000 TABS Address 5-38
Procedure 5-16 Configuring Analog Inputs 5-40
Procedure 5-17 Configuring Accumulator Inputs 5-42
Procedure 5-18 Performing the Carrier Test 5-44
Procedure 5-19 Performing the Loopback Test 5-46
Procedure 5-20 Logging Out 5-47
Procedure 5-21 Altering the Password 5-48
Procedure 5-22 Initializing the Database 5-49

1 Product Description

1.1 Overview

The WS2000 TABS (Figure 1-1) collects alarm and status information from Network Elements (NEs) and equipment equipped with TBOS (Telemetry Byte Oriented Serial) or TABS (Telemetry Asynchronous Block Serial) protocols and discrete telemetry interfaces. The WS2000 then reports the information to the Operations System (OS) using TABS protocol when polled by the host.

Figure 1-1 WS2000 TABS

The TBOS and TABS interfaces can be equipped with internal and external 202T modems, allowing distances greater than 4,000 feet between WS2000s. Because of its ability to combine multiple TBOS and TABS serial ports, bipolar analog inputs, pulse accumulator inputs, and discrete I/O logic into one TABS serial output, the WS2000:

- Provides low-cost monitoring and control features at customer premises or controlled environment vault sites
- Conserves the number of serial ports used on main data collection units
- Extends the range of network coverage
- Allows collection of TBOS and TABS data in new networks as a low-cost front end for evolving X.25-based networks.

The WS2000 provides a compact mechanical package for rack mounting using a metal enclosure for shielding and support.

A power supply/watchdog monitor circuit aids power up/power down situations and provides automatic reset/restart capability. Also, the monitor circuit has a microprocessor unit LED indication (**MPU RUN**) along with a relay output contact, and presents event Change-of-State (COS) conditions through the **COS** LED and a relay output that can be fed to an external alarm panel. A **COS RESET** front-panel pushbutton provides local reset for COS, which can also be reset externally through a rear-panel connection.

Nominal –24 Vdc or –48 Vdc sources supply power for the WS2000, which has its own integral power supply to meet onboard logic supply requirements.

Terminal block access for site input battery power connections, 4-wire modem lines, and MPU RUN and COS output contacts is available at the rear of the shelf. Port access for 10 serial channels is available on eight-pin connectors at the rear of the unit. Discrete input/output logic point access is available on two rear-accessible, 50-position, Delta-type connectors.

Besides the TABS host channel, the WS2000 (Figure 1-2) is equipped with four TBOS/TABS serial collection channels, 32 discrete inputs, and eight control outputs. Expansion daughter boards allow four additional TBOS-only serial collection channels, 32 discrete inputs, and eight control outputs. Other optional daughter boards provide eight analog inputs or eight pulse accumulator ports.

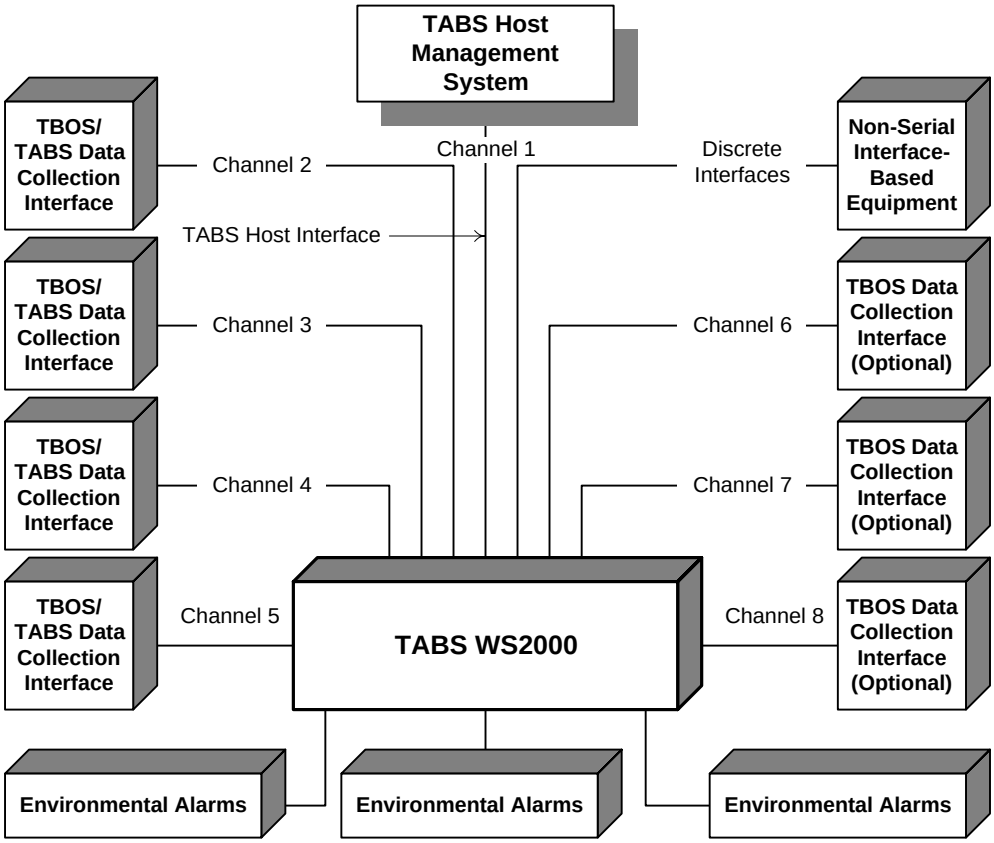

Figure 1-2 Overview of WS2000 Capabilities

The serial interfaces include Channel 0 for Craft maintenance and configuration and Channel 1 for reporting TABS data to the host. Serial Channels 2 – 5 are configured for TBOS (default) or TABS data collection. Channels 6 – 9, activated with the addition of an internally mounted daughter board, are capable of TBOS data collection only.

Other daughter board options add the following combinations:

- 32 alarm/status inputs and eight control outputs
- 32 alarm/status inputs and eight analog inputs
- 32 alarm/status inputs and eight accumulator inputs
- 202T modem (4-wire voice frequency) or VFCT interface for Channel 1 reporting

1.2 WS2000 Configurations

Table 1-1 lists part numbers for ordering the WS2000 TABS, accessories, and spares.

Table 1-1 WS2000 TABS Equipment Part Numbers

WS2000

Part No	Plugin	Report Protocol and Functions	Serial Ports	Discrete I/O		Analog Inputs	Pulse Accum	Modem Type
				Input	Output			
590-T241	500-T098	TABS	4 TBOS/TABS, 4 TBOS	32	8	–	–	–
590-T242	500-T099	TABS	4 TBOS/TABS, 4 TBOS	32	8	–	–	202T
590-T245	–	TABS A&P	4 TBOS/TABS	32	8	–	8	202T
590-T249	500-T108	TABS	4 TBOS/TABS	32	8	–	–	–
590-T250	500-T109	TABS	4 TBOS/TABS	32	8	–	–	202T
590-T308	500-T176	TABS w/*Summary Alarm*	4 TBOS/TABS, 4 TBOS	32	8	–	–	–
590-T309	500-T177	TABS w/*Summary Alarm*	4 TBOS/TABS, 4 TBOS	32	8	–	–	202T
590-T272	500-T133	TABS A&P	4 TBOS/TABS	64	8	8	–	VFCT
590-T297	500-T158	TABS A&P	4 TBOS/TABS	64	8	8	–	None
590-T298	500-T159	TABS A&P	4 TBOS/TABS	64	8	8	–	202T
590-T299	500-T160	TABS A&P	4 TBOS/TABS, 4 TBOS	64	8	8	–	None
590-T300	500-T161	TABS A&P	4 TBOS/TABS, 4 TBOS	64	8	8	–	202T
590-T243	500-T100	TABS	4 TBOS/TABS, 4 TBOS	64	16	–	–	–
590-T244	500-T101	TABS	4 TBOS/TABS, 4 TBOS	64	16	–	–	202T
590-T251	500-T110	TABS	4 TBOS/TABS	64	16	–	–	–
590-T252	500-T111	TABS	4 TBOS/TABS	64	16	–	–	202T
590-T310	500-T178	TABS w/*Summary Alarm*	4 TBOS/TABS, 4 TBOS	64	16	–	–	–
590-T311	500-T179	TABS w/*Summary Alarm*	4 TBOS/TABS 4 TBOS	64	16	–	–	202T

Accessories

590-0106	500-2006	Discrete Expander	32	8	–	–	–	
590-0074	500-2004	Discrete Expander	64	16	–	–	–	
590-T304	500-T091	Discrete Expander	64	8	8	–	–	
519-0300	–	Portable Wesmaint	–	–	–	–	–	
519-T001	–	Rack-Mount Wesmaint	–	–	–	–	–	
567-T007	–	PC Wesmaint Software	–	–	–	–	–	
533-T030	–	19-inch Telzon Wire-Wrap Block	64	16	–	–	–	

Table 1-1 WS2000 TABS Equipment Part Numbers

Accessories							
533-T011	–	23-inch Telzon Wire-Wrap Block	64	16	–	–	–
533-T032	–	Front-Access Interface Assy	64	16	–	–	–
585-T034	–	Rear-Access Interface Assy	64	16	–	–	–
520-T001	–	Rack-Mount 202T Modem	–	–	–	–	202T
520-T007	520-T007	Audible/Visual Alarm Panel (Monitors one RTU)	–	–	–	–	–
520-T025	520-T025	Universal External Alarm Panel (Monitors eight RTUs)	–	–	–	–	–
620-0077	620-0077	8-Pin Serial Connector (Ten are included in 585-0005)	–	–	–	–	–
620-0078	–	50-Pin Delta Connector	–	–	–	–	–
990-0150	–	Serial Insertion Tool (One is included in 585-0005)	–	–	–	–	–
977-T042	–	JB3 Termination Plug	–	–	–	–	–
585-0005	–	Serial Connector Kit (Includes 12 connectors, one tool)	–	–	–	–	–
500-2000	–	19-inch Shelf Assembly	–	–	–	–	–
585-T055	–	23-inch Rack Adapter Kit	–	–	–	–	–
994-T017	–	WS2000 TABS Technical Manual	–	–	–	–	–

1.3 Other Products From Westronic Systems

The following provides information about other Westronic Systems products that are available to meet alarm system needs. Call ***403-250-8304*** to talk with a Westronic representative to learn more about these and other Westronic Systems, Inc., products.

1.3.1 WS1000

The WS1000 product line complements many operations and network management systems by providing an economical, flexible means of converting varying quantities of discrete (dry-contact) alarm, status, and control data to a simple, easy-to-handle TABS or TBOS interface.

Available configurations provide the flexibility to select the unit best suited for various applications. Choose from 64 – 128 discrete inputs and from 8 – 40 discrete outputs.

Small size and flexible mounting requirements allow placement of the unit close to the source of discrete interfaces. WS1000 can mount in an equipment bay or on a distribution frame as the application demands. This flexibility results in considerable reduction in the amount of required wiring. The basic structure of a front-facing wire-wrap block, commonly found on distribution frames, provides a sturdy housing for the Terminator. Located on the easily removable module contained within the housing are all the active components. WS1000 is the ideal way to collect discrete alarms throughout a site or service area with feedback to a WS2000 or WS3000 hub.

1.3.2 C1000

The C1000 complements many operation support systems by providing an economical and flexible means of collecting small to large quantities (32 – 256 points) of discrete alarm and status data and converting them to simple, easy-to-handle TABS or TBOS interface.

Different versions of the C1000 allow communications with either a TABS or TBOS host. The C1000 can pass-through polls for other addresses, permitting daisy-chains of C1000 units in larger configurations and permitting the C1000 and local NE telemetry data to combine into a single channel. In some cases, data can combine through a single modem.

The C1000 requires only one vertical space (1.75 inch) in either a 19-inch or 23-inch equipment rack, allowing location as close as possible to the source of discrete interfaces. The result is a large reduction in the amount of wiring required to pick up alarm and status data. The reduction in wiring eliminates the possibility of losing data through unknown disconnected, moved, or cut wiring. Serial and discrete interfaces are through standard 9-pin subminiature and 50-pin connectors, making installation and replacement exceptionally fast and simple.

The C1000 is equipped with two serial ports:

- The first, a host port, serves as a TABS or TBOS host communications interface that can be equipped with an optional 1,200-bps Bell 202T-compatible internal modem, allowing the C1000 to be located beyond the range of standard RS-422/RS-485 interfaces.
- The second, an expansion port, serves as a TABS or TBOS data collection interface.

The housing can accommodate up to eight 50-pin discrete interface connectors. All the different configurations use this same housing.

1.3.3 WS3000

The WS3000 is a powerful telemetry unit that combines the most useful functions of discrete and serial alarm collection, mediation, and access with a high-speed processor and large database capacity. The SuperScanner is the ideal bridge between today's telemetry networks and the advanced protocols now appearing. With Ethernet asynchronous connectivity, database capacity of 30,000 data points, the WS3000 is the choice of quality telecommunications carriers. WS3000 features include the following:

- Optional ethernet interface
- Available solutions for remote alarm monitoring over TL1 ASCII TCP/IP ethernet, OSI ethernet, and asynchronous communications
- Data collection using TBOS, TABS, and TELTRAC protocols
- 9 serial ports supporting user-selectable RS-232/RS-422/RS-485 interfaces from 1,200 – 9,600 bps
- 32 – 512 discrete alarm/status inputs and 8 – 128 discrete control outputs with capability to support a maximum of 30,000 alarm points
- Custom protocols are available on a special assembly basis

2 Hardware Description

2.1 Front-Panel Indicators and Controls

Figure 2-1 is an illustration of the WS2000 front panel, showing the location of the front-panel indicators and controls.

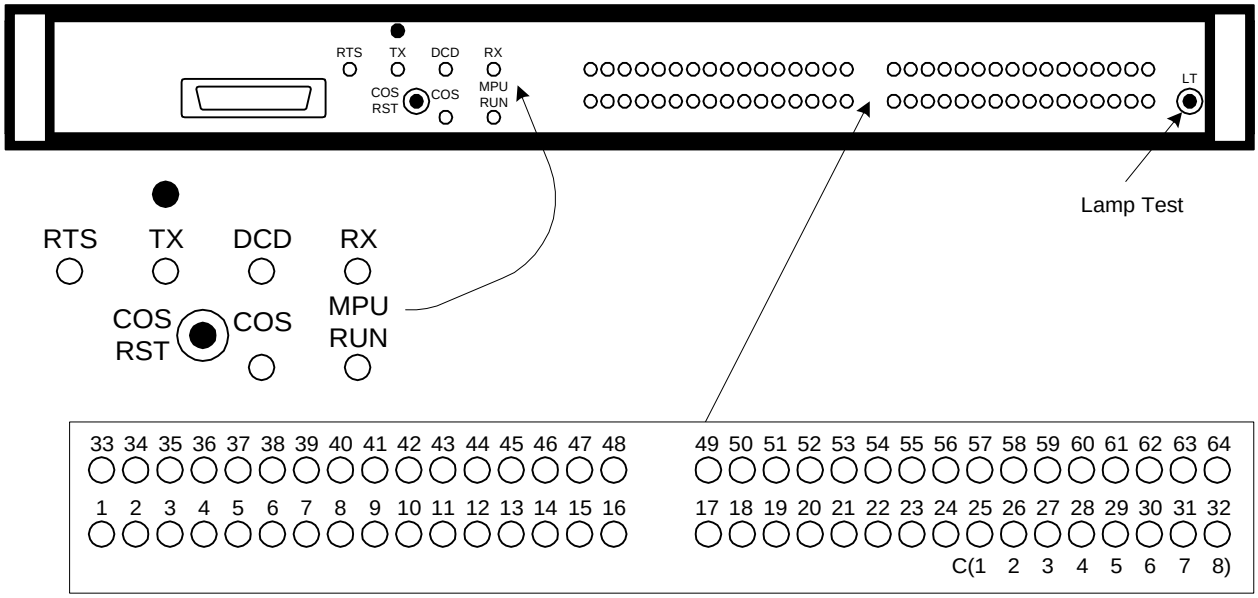

Figure 2-1 WS2000 Front Panel

2.1.1 Indicators

The following are the WS2000 front-panel indicators:

RTS – Request-to-Send – Carrier Output

TX – Transmit – Transmit data indication

DCD – Data Carrier Detect – Carrier frequency received

RX – Receive – Receive data indication

The **RTS**, **TX**, **DCD**, and **RX** indicators display line conditions on the host port. When not equipped with an internal 202T modem, WS2000 has an annunciator board instead to display line conditions. The WS2000 host port then uses a standard external RS-232 modem.

COS – Change-of-State LED – Indicates serial/discrete input change-of-state (alarm) for inputs to the WS2000. The **COS** LED mirrors the state of the COS relay: lit when the relay is activated and extinguished when the relay is deactivated.

MPU RUN – Microprocessor Run LED – Indicates proper initialization and operation of microcomputer and real-time operating system software. Failure indicated if Off.

Status/Alarm LED (**1** – **32**) **–** Input Indications – Alarms present on Points 1 – 32. LEDs 25 – 32 indicate for control outputs 1 – 8 when backplane jumper Z7 is installed.

Status/Alarm LED (**33** – **64**) **–** Input Indications – Alarms present on Points 33 – 64. LEDs 57 – 64 indicate for control outputs 9 – 16 when backplane jumper Z9 is installed.

2.1.2 Pushbuttons

WS2000 has the following front-panel pushbuttons:

COS RST – Change-of-State Reset – Resets the COS relay and extinguishes the **COS** LED to acknowledge an alarm condition on serial/discrete inputs to the WS2000.

LT – Lamp Test – Lights all Status/Alarm LEDs.

When the WS2000 detects a new alarm, it lights the front-panel LED for the associated alarmed input (1 – 64) and activates the COS relay, which lights the **COS** LED. The front-panel alarm LED, the **COS** LED, and the COS relay remain active until the alarm clears. At this point, this is an unacknowledged alarm.

However, you can acknowledge the new alarm or multiple unacknowledged alarms by pressing the **COS RST** pushbutton or an external pushbutton that temporarily grounds the COS Reset terminal on TB1. The COS relay then deactivates and extinguishes the **COS** LED, but the front-panel LED for the alarmed inputs (1 – 64) remains lit until the alarms clear. If the COS relay outputs on TB1 drive an external audible device, the device sounds while alarms are active and becomes silent when the alarms clear or are acknowledged through the **COS RST** pushbutton.

Any new alarm detected after you release the **COS RST** pushbutton reactivates the COS relay, **COS** LED, and the external audible device, if connected. If multiple alarms exist and an acknowledged alarm clears, then reoccurs, the WS2000 considers the alarm as unacknowledged and reactivates the COS relay and LED. When all unacknowledged alarms have cleared, the COS relay and LED deactivate.

Caution: Do not use the COS RST pushbutton to acknowledge alarms when an optional external alarm annunciator connects to the WS2000 unit. The external alarm annunciator derives its alarming input from the COS relay and provides its own ACO pushbutton for alarm acknowledgment.

2.1.3 Modem Output Level Adjustment Control

When WS2000 is equipped with the optional 202T/V.23 modem, you can adjust the transmit output level with a front-panel adjustment. The adjusting screw is at the top of the front panel above the **TX** LED. Turn the adjusting screw clockwise to increase the output level and counter-clockwise to decrease it.

2.2 Interfaces

2.2.1 Discrete Interfaces

Each of the WS2000 TABS and discrete expander units handle 32 status/alarm inputs, with maximum on-board expansion capabilities of 64 inputs each. Each provides eight relay control outputs with maximum expansion capability of 16 outputs each. LEDs indicate on the status/alarm inputs and control outputs.

Discrete logic inputs, whose inputs require *wetting* current to operate, must reference either positive or negative battery, as desired. WS2000s and discrete expanders derive their wetting current from the input power.

The discrete logic outputs (control points) use magnetically latched Form C (SPDT) or Form A (SPST) relay contacts and individually can operate in momentary or latched modes. In latched mode, the last output is magnetically held to ensure that the output remains during power outages. Backplane jumper connections (see Figure 3-13) determine the control output type (Form A or C). Normally, Form A outputs are open contacts, whereas Form C outputs are both normally open and normally closed. The wiper of each Form C relay connects to a common control voltage. Figure 2-2 shows the Form A and Form C configurations.

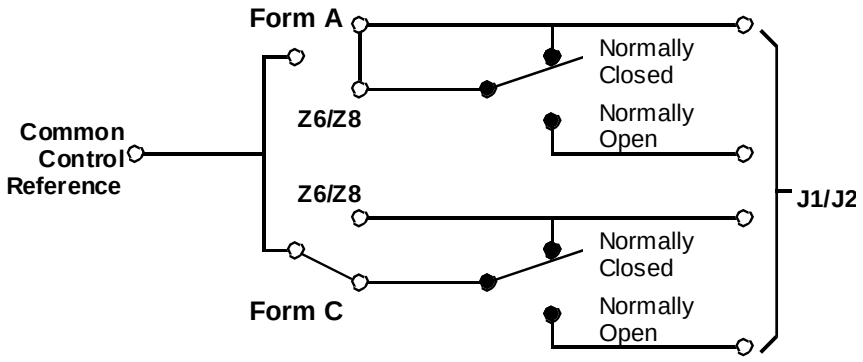

Figure 2-2 Form A and Form C Control Output Configuration

Through jumper strap selections, groups of eight relay control outputs can be directly strapped as status inputs to allow status monitoring of control outputs. Backplane jumper Z7 routes control outputs 1 – 8 to status input points 25 – 32 and jumper Z9 routes outputs 9 – 16 to inputs 57 – 64. Routing the control outputs in this manner reduces the number of discrete input points from 32 to 24 inputs or from 64 to 56 or 48 inputs.

2.2.2 Serial Interfaces

A fully loaded WS2000 comes equipped with 10 serial ports:

- Channel 1 supports TABS host communications using an RS-232, RS-422, or RS-485 interface.
- Channels 2 – 5 collect TBOS or TABS data using an RS-232, RS-422, or RS-485 interface.
- Channels 6 – 9 collect TBOS data only using an RS-422 interface only.
- Channel 0 is an RS-232, 9600-bps Craft interface port.

As an option, Channel 1 can also have an internal-mount Bell 202T/CCITT V.23 or VFCT modem to provide the host communications interface. Through jumper strap option selections, the internal modem provides a two- or four-wire voice-frequency interface. Front-panel LEDs (see *Indicators* on Page 2-1) indicate transmit data, receive data, request-to-send, and carrier detection activity. An access hole in the front panel enables transmit output level adjustments.

2.3 Configuration and Diagnostics

The Craft port, which allows configuration and diagnostics, is accessible through connectors on the front and rear panels of the WS2000. Data input to the unit and data reported to the host are viewable from either of these connectors. The following major functions are accessible at these connectors:

- Configure custom or standard display point process lists
- Assign process lists to the available data collection inputs (discrete or serial ports)
- Configure and map the data collection displays into the displays available on the TABS host communications port

Optional four-digit hexadecimal password control can be set into the WS2000. The password resides on the 1K EPROM located on the WS2000 shelf; thus, the password remains even if the plugin unit is removed or replaced.

2.4 Optional External Accessories

2.4.1 External Discrete Expanders

Each WS2000 can control a maximum of seven WS2000 discrete expanders over a parallel Westronic Peripheral Interface Bus (WPIB) as shown in Figure 2-3. The WS2000 discrete expander has a minimum of 32 discrete alarm status inputs and eight discrete control outputs. Through a daughter board, the discrete expander is capable of further expansion:

- 32 inputs/8 control outputs
- 32 inputs/8 analog inputs.

Only the first two expanders are capable of analog input expansion. Thus, a discrete expander can provide the following:

- A maximum of 64 discrete inputs and 16 discrete control outputs
- A maximum of 64 discrete inputs, 8 discrete outputs, and 8 analog inputs

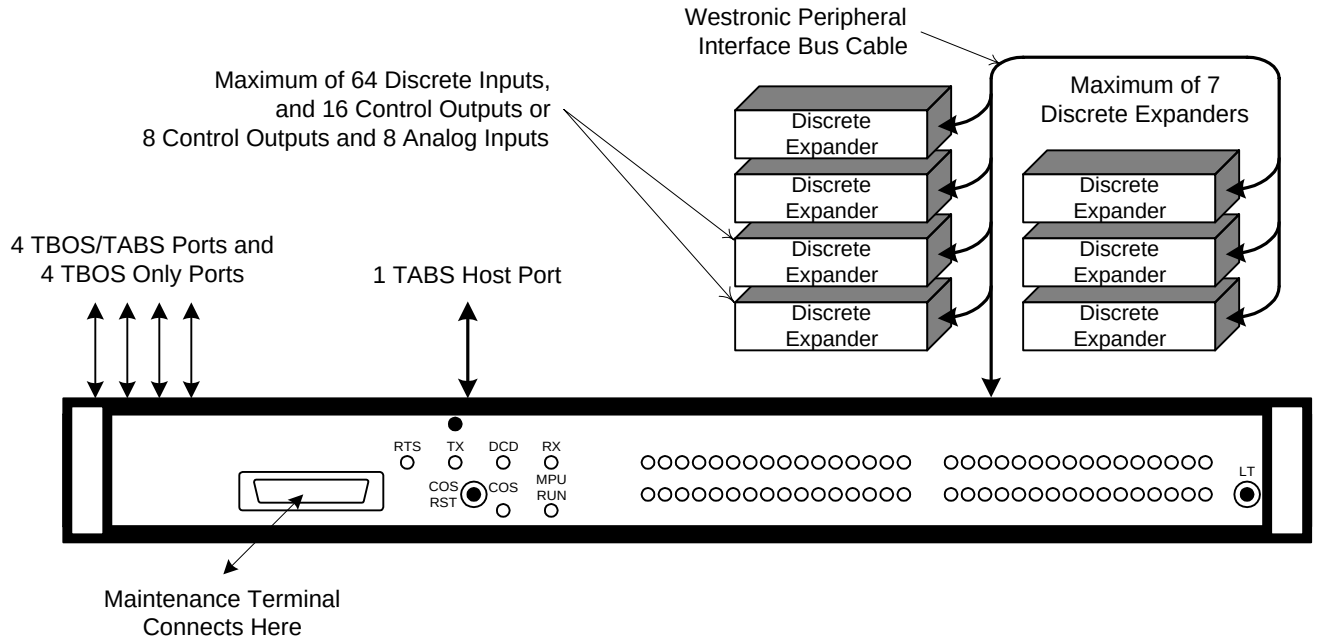

Figure 2-3 Expansion Using Discrete Expanders

2.4.2 Rack-Mount Modem

Rack-mount modem panels allow a WS2000 data collection serial channel to operate on a 2- or 4-wire Frequency Shift Keying (FSK) circuit. Two modem types are available:

- 202T/CCITT V.23 modem (PN 520-T001)
- VFCT modem (PN 540-T001)

Each modem type requires only one vertical space (1.75 inches) in a standard 19-inch equipment rack. Rack-mount adapters are available for mounting in a 23-inch rack.

The front panel has four LED indicators to indicate RTS, TX, DCD, and RXD activity. In addition, strap settings select continuous carrier or normal RTS. See *Rack-Mount Modem* on Page 3-31.

2.4.3 External Alarm Panel

The Westronic external alarm panel connects to the COS relay outputs located on TB1 to provide audible and visual standing alarm summary indications. The external alarm panel has an audible annunciator, an audible alarm disable toggle switch, an **ACO** button, and an alarm summary LED.

Whenever the WS2000 detects a new alarm, it activates the COS relay, which in turn activates the audible annunciator. As long as the WS2000 has one or more active alarms, the COS relay remains energized and the alarm summary LED on the external panel stays lit. The audible annunciator remains active until you press the **ACO** button (***not*** the **COS RST** pushbutton on the WS2000) or all active alarms have cleared. The WS2000 momentarily opens, then closes, the COS relay to indicate a new alarm to the alarm panel, reactivating the audible annunciator.

Because the external alarm panel derives its alarm input from the COS relay, it is of utmost importance to ***not use*** the **COS RST** pushbutton located on the WS2000 front panel. To do so defeats the purpose of having the external alarm panel.

2.4.4 Universal Annunciator Panel

The Universal Annunciator Panel performs the same function and connects in the same manner as the external alarm panel, except that it provides alarm annunciation for a maximum of eight different remote terminal units.

2.4.5 Telzon Interface Assembly

The Telzon interface assembly is a standard Type-89 termination block. The panel provides front-panel wire-wrap access to all discrete and serial connections. A maximum of two blocks can mount on the same mounting bar. Interconnecting cables accommodate all wire-wrap interfaces. *Telzon Termination Panel* on Page 3-37 has more detailed information on the Telzon interface assemblies.

The Telzon interface assembly is ideal for central office installations where four vertical rack spaces (7 inches) are available for the WS2000 unit and interface assembly. The Telzon interface assembly provides wire-wrap connections for the following maximums:

- 64 discrete alarm inputs (status input and status input return)
- 16 discrete control outputs (Form A only)
- 8 serial data collection ports
- Host communications port

2.4.6 Front-Access Wire-Wrap Assembly

The front-access wire-wrap interface assembly is suitable for Controlled Environment Vault (CEV) installations where front access to all connections is required because of rack space limitations (see Figure 3-32). The front-access interface assembly, which requires two rack increments (3.5 inches) – one increment for itself and one increment for the WS2000, provides wire-wrap access to all discrete, serial, and power connections on the WS2000. Interconnecting cables are available with the unit to accommodate the wire-wrap interfaces. The front-access interface assembly has the following features:

- 64 discrete alarm inputs (status input and status input return)
- 16 discrete control outputs (Form A)
- 8 serial data collection ports
- 1 serial Host port
- Power input
- Frame ground
- Local MPU RUN relay and audible alarm relay
- External COS reset input

2.4.7 Rear-Access Wire-Wrap Assembly

The rear-access interface assembly is ideal for installations having only one vertical rack space (1.75 inches) available for all alarm equipment. The rear-access interface assembly, which preserves the one-increment vertical space for each WS2000 unit, consists of three plug adapters that mount on the discrete and serial WS2000 backplane connectors (see Figure 3-34). The assembly provides wire-wrap connections for the following:

- 64 discrete alarm inputs
- 16 discrete control outputs (Form A or C)
- 8 serial data collection ports, 1 Host port, and 1 Craft port.

2.5 Specifications

This section provides detailed information on the electrical, environmental, and mechanical specifications of the WS2000 product line. Also included are detailed data for the parallel, serial, and host ports, and auxiliary interfaces.

2.5.1 Electrical

The following are typical power and electrical requirements:

- Input voltage range: –20 Vdc to –60 Vdc
- Power requirements:
  - 5.0 Watts (No input sense currents)
  - 24.0 Watts (64 inputs sense currents)
- Fusing of WS2000 units: See Table 3-33.
- External switching power available from the WS2000 unit
- WS2000 supply outputs:
  - +5.0 Vdc ± 5% at 1.5 Amps (maximum)
  - +12.0 Vdc ± 0% at 400 mA each (maximum)
  - ±12.0 Watts total output power

2.5.2 Environmental

- Operating ambient temperature range: 0° C to +55° C
- Humidity: < 95% noncondensing

2.5.3 Mechanical

The following lists WS2000 mechanical characteristics:

Dimensions

- Height: 1.75 inches (4.4 cm)
- Width: 17.4 inches (44.1 cm)
- Depth: 8.0 inches (20.3 cm)

Mounting

- 19-inch (48.3 cm) rack mounting
- 23-inch (58.4 cm) rack mounting with optional adapters

Weight

- 5.3 lbs (2.4 kg) maximum unpackaged; 8 lbs (3.6 kg) packaged

Connectors

- Power, analog, and auxiliary connections: TB1
  14-pin, dual-level compression terminal block that accepts #14 to #24 AWG wire
- Serial and digital host port connections: P1 – P6, P8 – P13
  eight-position header terminal connectors. Mating connectors manufactured by:
  - Methode: PN 1300-108-424 or PN 130F-108-424
  - Westronic: PN 620-0077 or PN 690-T006/690-T007
- WPIB connection: P7
  34-position (2 x 17) ribbon cable header. Mating connector manufactured by:
  - Amp: PN 746094-8
  - Robinson Nugent: PN IDS-C34PK-SR-TR
  - Assman: PN AWP 34-7241
- Discrete and control output connections: J1, J2
  50-position, female, Delta-type connectors. Mating connector manufactured by:
  - TRW: PN 97-12500-180 or PN 97-12500-181
  - Westronic: PN 620-0078

2.5.4 Interfaces

This section provides detailed data on each of the WS2000 interfaces.

2.5.4.1 Parallel Interface

- WPIB (Westronic Peripheral Interface Bus)
- Eight WPIB addresses: one for the WS2000 and one for each discrete expander (maximum of seven)

2.5.4.2 Serial Ports

Host Port

- TABS protocol
  - Asynchronous
  - Eight-bit characters
  - Odd parity
  - One stop bit
  - 1,200 or 2,400 bps
- RS-232/RS-422/RS-485 selectable
- Optional Westronic 202T/V.23 modem:
  - 1,200 bps
  - Bell 202T/CCITT V.23 compliant
  - FSK
  - TX output: +1 dBm (maximum)
  - RX sensitivity: –6 dBm to –42 dBm (selectable, see *Internal 202T Modem (Optional)* on Page 3-9)
  - 2- or 4-wire modem
- Connectors: P6, P12, or TB1 (see Host Port on Page 3-21)

TBOS/TABS Communications Ports

- TBOS:
  - Asynchronous
  - Eight-bit characters
  - Odd parity
  - Two stop bits
  - 1,200 or 2,400 bps

- TABS:
  - Asynchronous
  - Eight-bit characters
  - Odd parity
  - One stop bit
  - 1,200 or 2,400 bps
- RS-232/RS-422/RS-485 selectable
- Connectors:
  - P3 (Channel 4)
  - P4 (Channel 2)
  - P10 (Channel 5)
  - P11 (Channel 3)

Optional Ports

- TBOS only:
  - Asynchronous
  - Eight-bit characters
  - Odd parity
  - One stop bit
  - 1,200 or 2,400 bps
- RS-422 only
- Connectors:
  - P1 (Channel 7)
  - P2 (Channel 9)
  - P8 (Channel 6)
  - P9 (Channel 8)

Wesmaint (Craft) Port

- Asynchronous, seven-bit characters, even parity, one stop bit, 9,600 bps
- RS-232
- +5 Vdc, ±12 Vdc
- Prog En (Program Enable/EEPROM Write Enable)
- Connectors: P5 (rear), front-access DB25

2.5.4.3 Status/Alarm Inputs

- 32 or 64 photo-coupled inputs arranged in groups of eight with a single common for all inputs
- Input voltage: –48/–24 Vdc Battery, (+) Battery Return
- Input current: 3 – 5 mA for each point
- Logic levels:

Input Power	Logic Level	Voltage
–24 Vdc	0 (Off)	Input open or –18 Vdc to –30 Vdc
	1 (On)	Input greater than –8.0 Vdc
–48 Vdc	0 (Off)	Input open or –40 Vdc to –60 Vdc
	1 (On)	Input greater than –12.0 Vdc

- Logic level sensing can be inverted through maintenance port configuration setup

2.5.4.4 Control Outputs

- 8 or 16 relay control outputs
- Momentary/latched operation set through the Craft port or by TABS host
- Contact arrangement (selectable for each output): SPST Normally Open (Form A) or SPDT (Form C) with common voltage applied to contact wiper
- Contact Ratings:
  - 2 Amps at 30 Vdc
  - 0.6 Amps at 110 Vdc
  - 60 Watts maximum switching power

2.5.4.5 Auxiliary

- MPU RUN Relay Output: SPDT (Form C)
- COS Relay Output: SPDT (Form C)
- Output Contact Ratings: 1 Amp at 60 Vdc
- COS RESET input: + Battery pulse

2.5.4.6 Analog Inputs

- 12 bipolar analog inputs
- ±1 Vdc input range
- 60:1 scaling adapter provided for 60-Vdc inputs
- User-configurable adapter can be used for other inputs
- 12-bit output with failed, changed, over-range, and sign bits

2.5.4.7 Pulse Accumulators

- Eight inputs (TTL or RS-422)
- Pulse width 500 nsec minimum
- 16-bit output

This page intentionally left blank.

3 Installation

3.1 Overview

This section describes WS2000 TABS hardware installation and configuration. The section begins with handling considerations and precautions, and moves on with installation details, and describes the physical unit layout and available options.

3.2 Handling Considerations and Precautions

WS2000 modules contain Complementary Metal-Oxide Semiconductor (CMOS) and N-Channel Metal Oxide Semiconductor (NMOS) integrated circuits to maximize noise immunity and promote low power consumption. These components are Electro-Static Discharge (ESD) sensitive and can be damaged if subjected to high static voltage levels. Therefore, ensure familiarization with the ESD procedures that follow. Packaging containing CMOS and NMOS components have a label as shown in Figure 3-1.

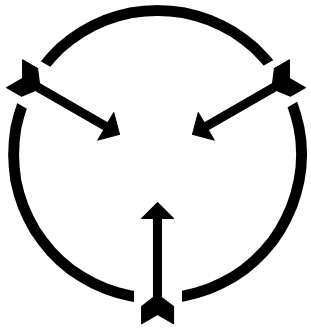

Static Sensitive
Maintain Antistatic Protection

Figure 3-1 Electrostatic Discharge (ESD) Label

CMOS and NMOS devices are equipped with protection diodes, but incorrect handling that allows excessive static energy to enter the devices can still cause device failure. These failures are not readily detected and, in time, can lead to premature device failure.

Adhering to the following guidelines significantly reduces the possibility of electrostatic damage on CMOS or NMOS components, thus improving system reliability and keeping downtime to a minimum:

- Before removing or inserting modules, always verify they are not carrying static charges. Always wear a personal grounding device, such as an ESD heel or wrist strap.
- When extracting a module, always place it in an antistatic bag or covering for transportation/storage.
- Perform repair work on modules in an antistatic work station. All personnel performing repair work must be grounded through wrist straps and antistatic matting in the work station.
- Exercise extreme care when handling CMOS/NMOS components. Do not touch the pins and always place components in antistatic foam for storage and transportation.
- Ensure that desoldering tools have static reduction. Some desoldering tools can actually generate large static voltages that damage CMOS and NMOS devices.

3.3 Module Substitution

The following are general procedures that must be followed when replacing or substituting WS2000 modules:

Caution: TheWS2000 front-panel DB25 connector (JB3) connects to the portable Wesmaint unit or to a termination plug when the rack-mount Wesmaint, which connects to rear-panel connector P5, is used. ***Remove*** the portable Wesmaint unit connection or the termination plug from connector JB3 ***before applying or removing power from the WS2000***.

- Turn power off when removing or inserting modules. The boards are designed to withstand removal and insertion with power on, but a highly recommended practice is to remove the system power supply when substituting modules.
- Make sure the substitute board is of the same type (part number) and contains the same options.
- Substitute modules only with modules that contain identical jumper connections. Observe the jumper and mini-jumper arrangements on the original board and ensure they are identical on the replacement module. Failure to do so can cause module failure, point displacement because of incorrect board addresses, communication failure with the host, and other related failures.
- Make sure the EEPROM with current firmware is installed on the replacement board. Always make sure that substitute or replacement EEPROMs are properly seated in the socket with correct pin alignment. Verify that all pins insert into the socket and none are bent inward/outward.

- Make sure replacement modules mate properly with the connectors at the rear of the bin. Never force a board into position because this can damage rear connectors. In case of insertion problems, determine why the module does not easily plug into position and take appropriate action. To plug a module into position, push firmly with the thumbs on the lower portion of the front. Remove a module by gently rocking it while drawing it from the bin until it is free of the connectors at the rear.

Only qualified electronics service personnel who are familiar with microcomputers and Input/Ouput (I/O) interfacing should carry out actual module repair. Attendance by such personnel in a WS2000 training course to learn special circuit concepts and applications is highly recommended. When returning a faulty module, describe the suspected problem, fault, or symptom on the documentation that accompanies the module.

3.4 Installation Procedures

The following paragraphs describe how to install the WS2000 and ancillary products into a permanent location. Refer to the check list at the end of this section for a step-by-step WS2000 installation guide. After working through the installation steps the WS2000 unit is ready for software configuration. Refer to Sections 4 and 5 for these procedures.

3.4.1 Installing the WS2000

The WS2000 requires one vertical space (1.75 inches) in a 19-inch standard telecommunications rack. Rack adapters are included with the unit for mounting in 23-inch wide racks. Figure 3-2 shows the various dimensions for the WS2000.

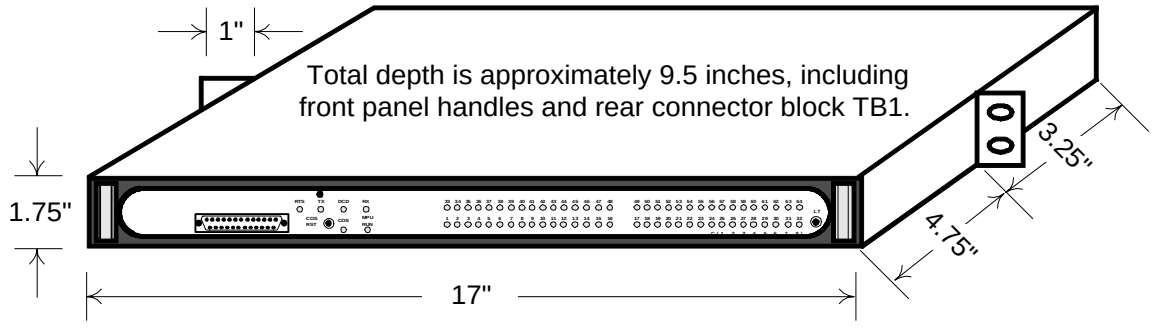

Figure 3-2 WS2000 TABS

3.4.2 Inspecting the WS2000

Before applying power, remove the WS2000 main board assembly from its housing and confirm that the plug-in expansion boards are seated properly. Strap options are preset in the factory; however, they can be changed according to user requirements. The following presents strap options for the main board, expansion boards, and the back plane.

3.4.3 Configuring the WS2000

3.4.3.1 Main Board

Four main boards (referred to as Type 1, Type 2, Type 3, and Type 4) are available. Compare the board in the unit with Figure 3-3 through Figure 3-6 to determine the type installed. Use the appropriate table, Table 3-1 through Table 3-4, to configure the main board.

Note: All strap options are preset at the factory.

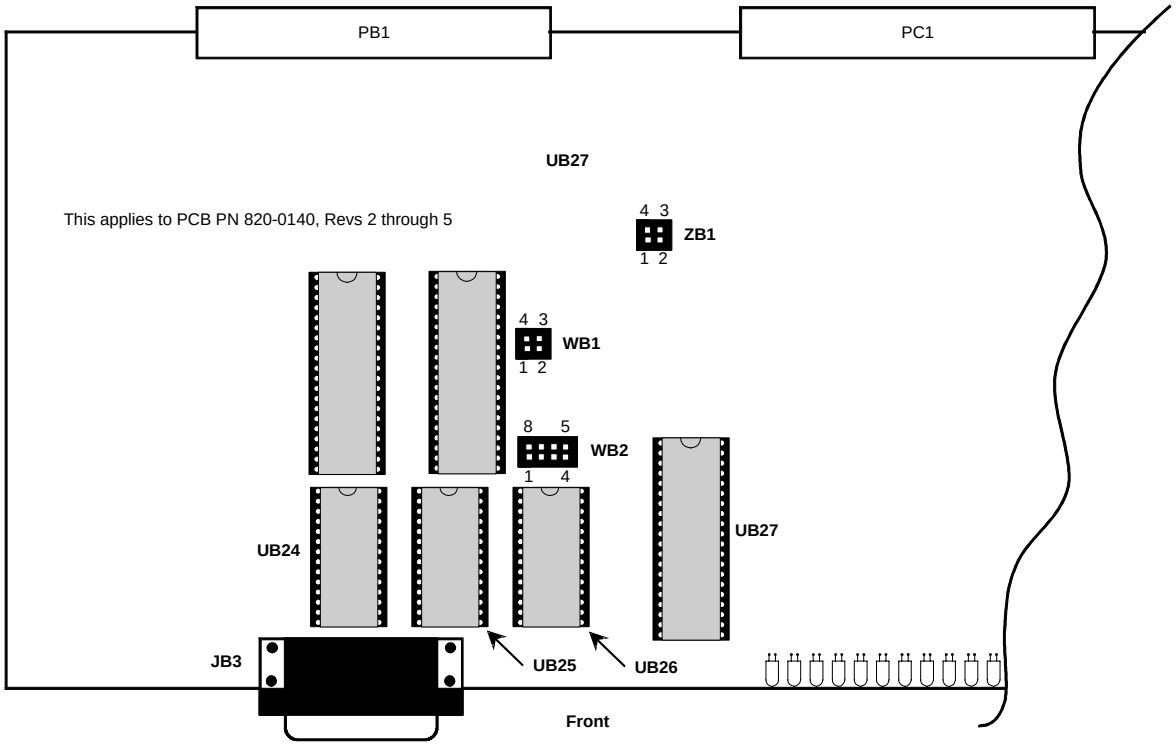

Figure 3-3 Strap Arrangements for Type 1 Main Board

Table 3-1 Strap Arrangements for Type 1 Main Board

Block	Pin	Function
ZB1	1 – 2	I/O Reset Enable
	3 – 4	Watch Dog Enable
WB1	1 – 2	Channel 1 RTS from Main board. Remove when daughter board provides source.
	3 – 4	Channel 1 Tx from Main board. Remove when daughter board provides source.
WB2	1 – 2, 7 – 8	32K EPROM (27C256)
	2 – 7, 3 – 6	32K EEPROM (28C256)
	3 – 6	8K EEPROM (28C64)
	4 – 5	32K RAM (65256)
	None	8K RAM (62640)

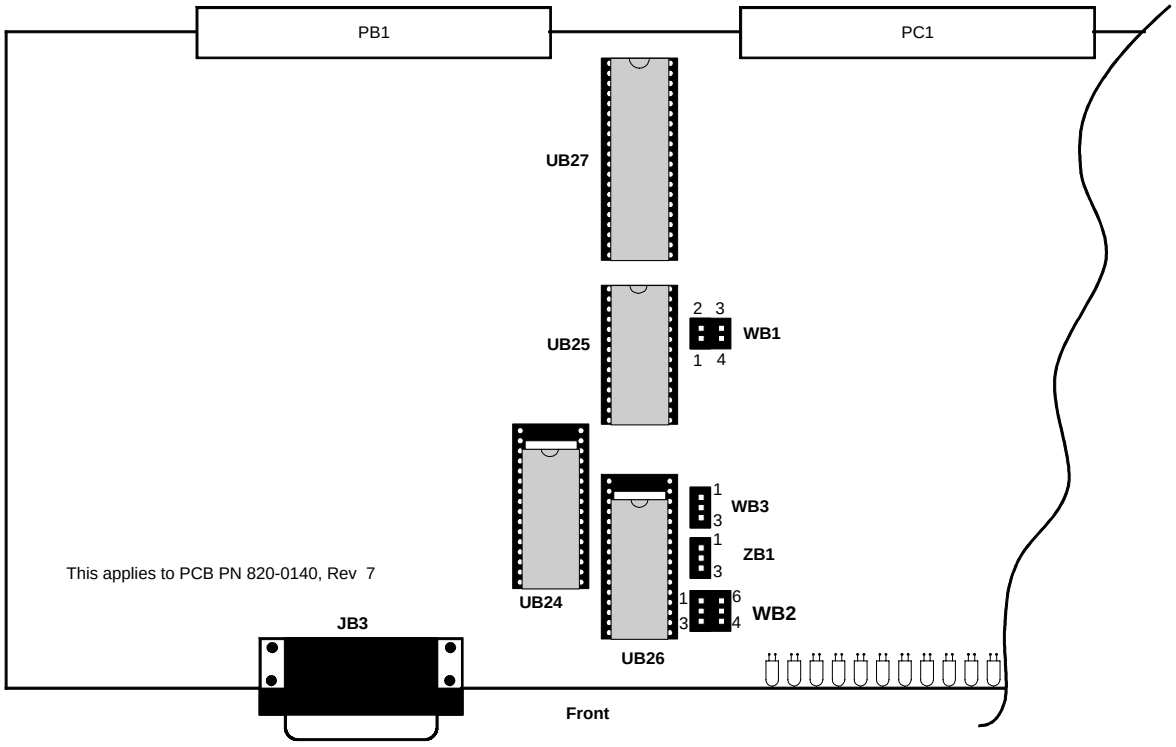

Figure 3-4 Strap Arrangements for Type 2 Main Board

Table 3-2 Strap Arrangements for Type 2 Main Board

Block	Pin	Function
WB1	1 – 4	Channel 1 RTS from Main board. Remove when daughter board provides source.
	2 – 3	Channel 1 Tx from Main board. Remove when daughter board provides source.
WB2	1 – 6	**Do Not Install**. Address range of UB24 RAM
	2 – 5	**Do Not Install**. Address range of UB24 RAM
	3 – 4	UB25 EEPROM (Write Enable)
WB3	1 – 2	UB26 is 32-pin device.
	2 – 3	UB26 is 28-pin device.
ZB1	None	Watch Dog Enable

Note: When UB24 and UB26 are 28-pin devices, insert them in the pins closest to the front of the board.

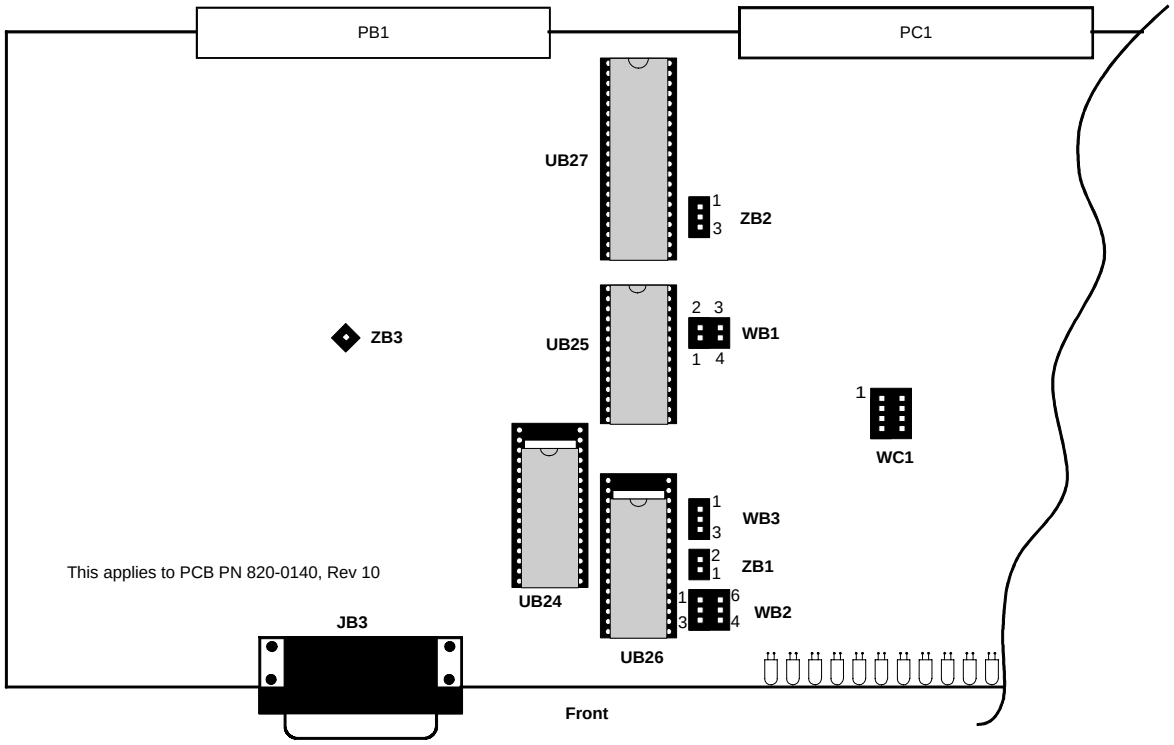

Figure 3-5 Strap Arrangements for Type 3 Main Board

Table 3-3 Strap Arrangements for Type 3 Main Board

Block	Pin	Function
WB1	1 – 4	Channel 1 RTS from Main board. Remove when daughter board provides source.
	2 – 3	Channel 1 Tx from Main board. Remove when daughter board provides source.
WB2	1 – 6	Address range of UB24 RAM (Note)
	2 – 5	Address range of UB24 RAM (Note)
	3 – 4	UB25 EEPROM (Write Enable)
WB3	1 – 2	UB26 is 32-pin device.
	2 – 3	UB26 is 28-pin device.
ZB1	None	Watch Dog Enable
ZB3	Installed	For Testing Purposes
WC1	Not Used	Board ID

Note: When UB24 and UB26 are 28-pin devices, insert them in the pins closest to the front of the board.

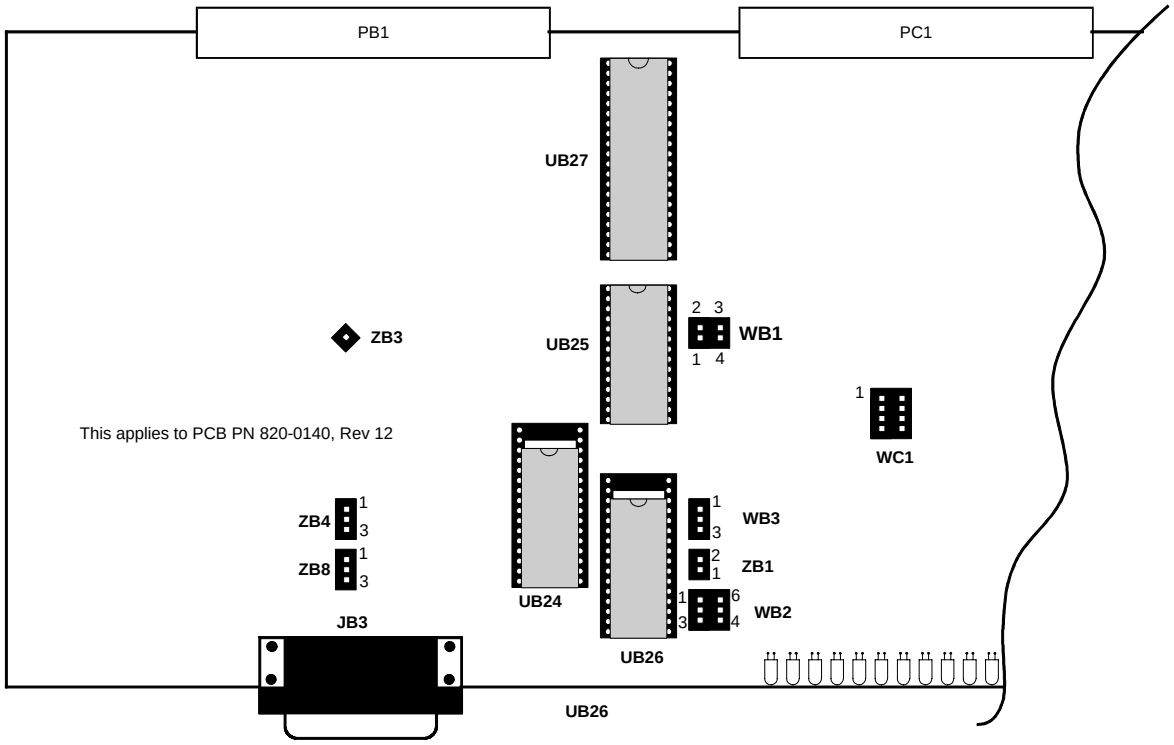

Figure 3-6 Strap Arrangements for Type 4 Main Board

Table 3-4 Strap Arrangements for Type 4 Main Board

Block	Pin	Function
WB1	1 – 4	Channel 1 RTS from Main board. Remove when daughter board provides source.
	2 – 3	Channel 1 Tx from Main board. Remove when daughter board provides source.
WB2	1 – 6	Address range of UB24 RAM (Note)
	2 – 5	Address range of UB24 RAM (Note)
	3 – 4	Write enable, when UB25 is EEPROM
WB3	1 – 2	UB26 is 32-pin device.
	2 – 3	UB26 is 28-pin device.
WC1	Not Used	Board ID
ZB1	1 – 2	Install to disable watchdog timer.
ZB8	1 – 2	UB25 bank switchable
	2 – 3	Not Applicable
ZB3	1	Test point

Table 3-4 Strap Arrangements for Type 4 Main Board

Block	Pin	Function
ZB4	1 – 2	UB25 bank switchable
	2 – 3	Not Applicable

Note: When UB24 and UB26 are 28-pin devices, insert them in the pins closest to the front of the board.

3.4.3.2 Internal 202T Modem (Optional)

The 202T modem board has user-selectable option straps. Z5 is factory installed to bypass a timing circuit used in other applications. The board comes supplied with default strap settings. Figure 3-7 illustrates the jumper block locations.

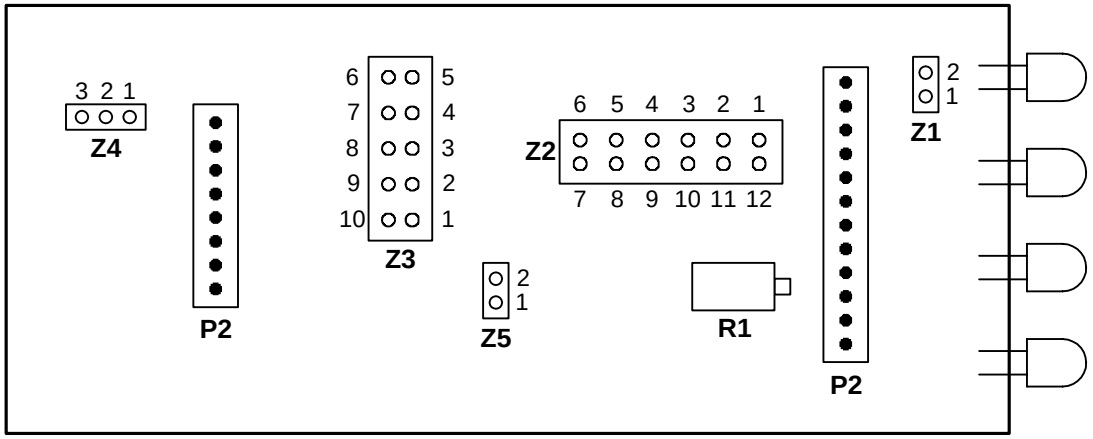

Figure 3-7 202T Modem Board

Table 3-5 through Table 3-7 describe the modem strapping options shown in Figure 3-7.

Table 3-5 202T Modem Card Jumper Blocks and Functions

Item	Function
Z1	Jumper block Z1 does not apply to WS2000 applications.
Z2	Jumper block Z2 performs two functions: ■ Pins 1 – 12 provide receiver squelch on the Request To Send (RTS) line. Install when modem runs 2-wire half-duplex mode. ■ Pins 2 through 11 establish the modem mode operation type. See Table 3-6 for Z2 strap arrangements. Factory default is 4W/202.

Table 3-5 202T Modem Card Jumper Blocks and Functions

Item	Function
Z3	Jumper block Z3 sets the modem receive signal sensitivity. SeeTable 3-7 for receiver sensitivity Z3 strap arrangements. The setting should be set 5 – 10 dBm lower than the actual receive level. Default is –36 dBm.
Z4	Jumper block Z4 selects between 2-wire and 4-wire operating modes. Strap pins 1 – 2 for 2-wire operation or strap pins 2 – 3 for 4-wire operation. Default is 4-wire.
Z5	Jumper block Z5 provides a timing circuit for another product line/application. Z5 must be strapped when used in the WS2000 to bypass the timing circuit. Default is installed.
R1	Trim pot R1 adjusts the modem transmit output level. Clockwise rotation increases output level (+3 dBm maximum output). Default is –10 dBm.

Table 3-6 202T Modem Mode Operation Type (Z2 Jumper Block)

Mode	Z2 Pin Straps				
	2–11	3–10	4–9	5–8	6–7
2W/202	In	Out	In	In	In
2W/202/EQ	Out	Out	In	In	In
2W/V.23	In	Out	Out	In	In
2W/V.23/EQ	Out	Out	Out	In	In
4W/202	In	Out	In	In	Out
4W/202/EQ	Out	Out	In	In	Out
4W/V.23	In	Out	Out	In	Out
4W/V.23/EQ	Out	Out	Out	In	Out

Table 3-7 202T Modem Receive Signal Sensitivity (Z3 Jumper Block)

Rx Level	Z3 Pin Straps				
	1–10	2–9	3–8	4–7	5–6
–6 dBm	In	In	In	In	In
–12 dBm	Out	Out	Out	Out	In
–18 dBm	Out	Out	Out	In	Out
–24 dBm	Out	Out	In	Out	Out
–30 dBm	Out	In	Out	Out	Out
–36 dBm	In	Out	Out	Out	Out
–42 dBm	Out	Out	Out	Out	Out

3.4.3.3 **Analog Input and Scaler Adapter** (Optional)

Strap options on the analog daughter board are set at the factory and must not be modified. Eight separate analog inputs can connect to the daughter board from a separate 19-inch rack-mounted Analog Input and Scaler Adapter panel. The Analog Input and Scaler Adapter panel connects to the WS2000 through a special cable from P1 on the panel to WS2000 connector J2. Alarm inputs that normally connect to J2 pass directly through this cable. Figure 3-8 shows the Analog Input and Scaler Adapter panel.

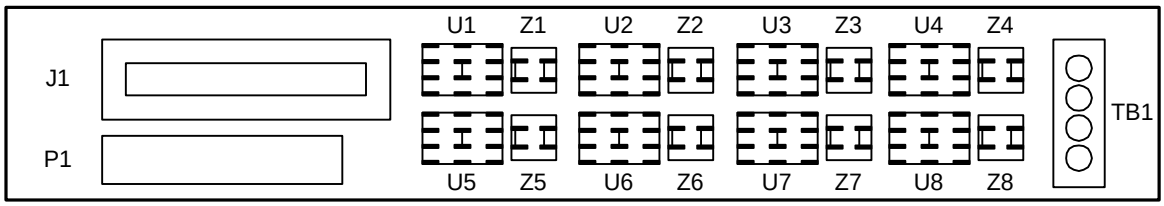

Figure 3-8 Analog Input and Scaler Adapter Panel

The Analog Input and Scaler Adapter panel can contain a maximum of eight scaling adapters. Each adapter (U1 – U8) is a voltage bridge that scales the input voltage to ±1 Vdc using its associated jumper block (Z1 – Z8).

3.4.3.3.1 Strap Options

Strap Pins 4–5 and 2–7 on the associated jumper block for standard voltage inputs. These pin straps are the default settings. For other types of inputs, contact Westronic Customer Service for specific application details.

3.4.3.3.2 Scaler Adapter Part Numbers

Three scaler adapters are available:

- PN 540-T007 is a 60:1 scaling adapter used for voltage inputs up to ±60 Vdc (for example, –48 Vdc battery).
- PN 540-T013 is a 30:1 adapter for scaling up to ±30 Vdc.
- PN 540-T006 is an unconfigured scaling adapter.

  With this last adapter, you solder in scaling resistors based on the input voltage requirement. Figure 3-9 has a schematic of the adapter panel.

  Recommendation: Do not allow the monitored input voltage applied to this scaling adapter to exceed ±100 Vdc because of physical design limits of the analog scaler panel.

Note: Pin numbers are located on bottom.

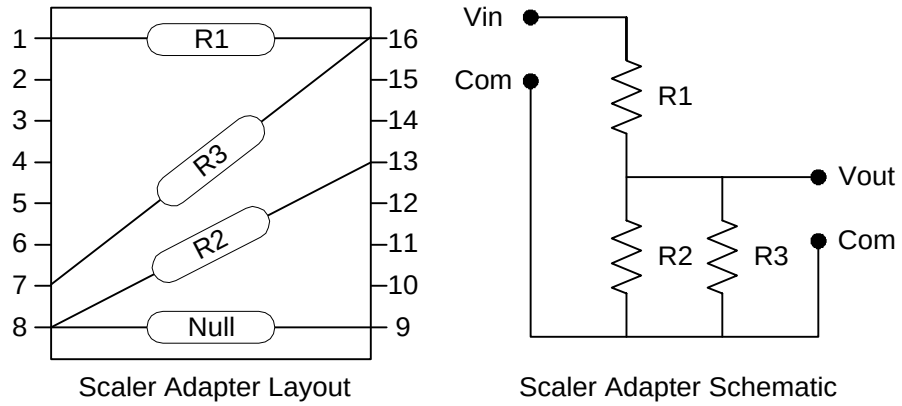

Scaler Adapter Layout

Scaler Adapter Schematic

Figure 3-9 Scaler Adapter Layout and Schematic

3.4.3.3.3 Determining Scaling Voltage Divider Values

The basic voltage divider consists of R1 and R2. R3 is a trim resistor that adds increased accuracy. Consider the following points when determining values for R1 and R2 for different input voltages:

1. The sum of R1+ R2 should be greater than 20k Ohms and less than 100k Ohms (20 kΩ < R1 + R2 < 100 kΩ).
2. The power rating of the selected resistors must be at least twice the calculated bridge current $Presistor \geq 2 \times Ibridge$.
3. Use ±1% resistors.

Table 3-8 lists recommended values for R1 and R2. Listed values are for commonly available ±1% resistors.

Table 3-8 Recommended R1/R2 Values for Analog Scaler Panel

Full-Scale Vdc In	**R1** (kΩ) ±1%	**R2** (kΩ) ±1%
100	88.7	0.887
90	88.7	0.976
80	88.7	1.1
70	88.7	1.27
50	86.6	1.74
45	86.6	1.96
40	86.6	2.21
35	88.7	2.61
25	86.6	3.57
20	88.7	4.64
15	88.7	6.24
10	86.6	9.53

The ratio of input to output voltage provided by these recommended resistance values enables an output in the range from 0.980 Vdc through 1.0 Vdc. The scaled voltage needs to be as close as possible to 1.0 Vdc without exceeding 1.0 Vdc. R3, in parallel with R2, compensates for variances in resistor accuracy and availability, thus providing a more accurate scale factor. Use the following formulas to determine the values for R1 through R3:

To Calculate Vout Without R3:

$$Vout = \frac{Vin}{R1 + R2} \times R2$$

To Calculate Vout With R3:

$$Rparallel = \frac{R2 \times R3}{R2 + R3}$$

$$Vout = \frac{Vin}{R1 + \frac{R2 \times R3}{R2 + R3}} \times \frac{R2 \times R3}{R2 + R3}$$

3.4.3.4 **Pulse Accumulator** (Optional)

Figure 3-10 shows the Pulse Accumulator board. Z1 consists of eight, two-position blocks. Strapping Pin 1 to Pin 2 on each block sets the board for RS-422 inputs. Strapping Pin 2 to Pin 3 of each block sets the board for TTL inputs (factory default).

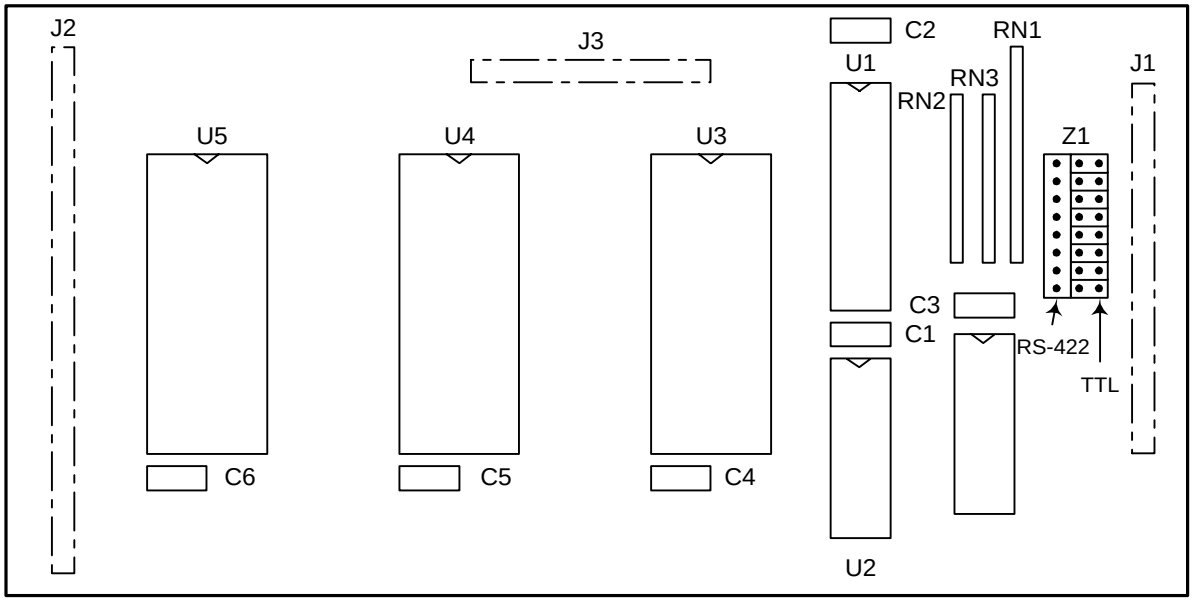

Figure 3-10 Pulse Accumulator Board

3.4.3.5 Backplane

Figure 3-11 shows the location of the discrete input/output point connectors (J1/J2), the Westronic Peripheral Interface Bus (WPIB) port (P7), the serial port connectors (P1 – P6, P8 – P13), and option jumper blocks Z1 – Z9.

3.4.3.5.1 Discrete Control Outputs (Form A/Form C)

The discrete logic outputs (control points) use magnetically latched contacts. Magnetic latching of the last output ensures that it does not change during power outages. Discrete logic configurations can be a normally open SPST contact (Form A) or a normally-closed/normally-open SPDT contact (Form C), with the wiper of each control output connected to a common control voltage. Relay output contact configurations are jumper selectable for each point. One common return is available and the site battery voltage serves as the input source.

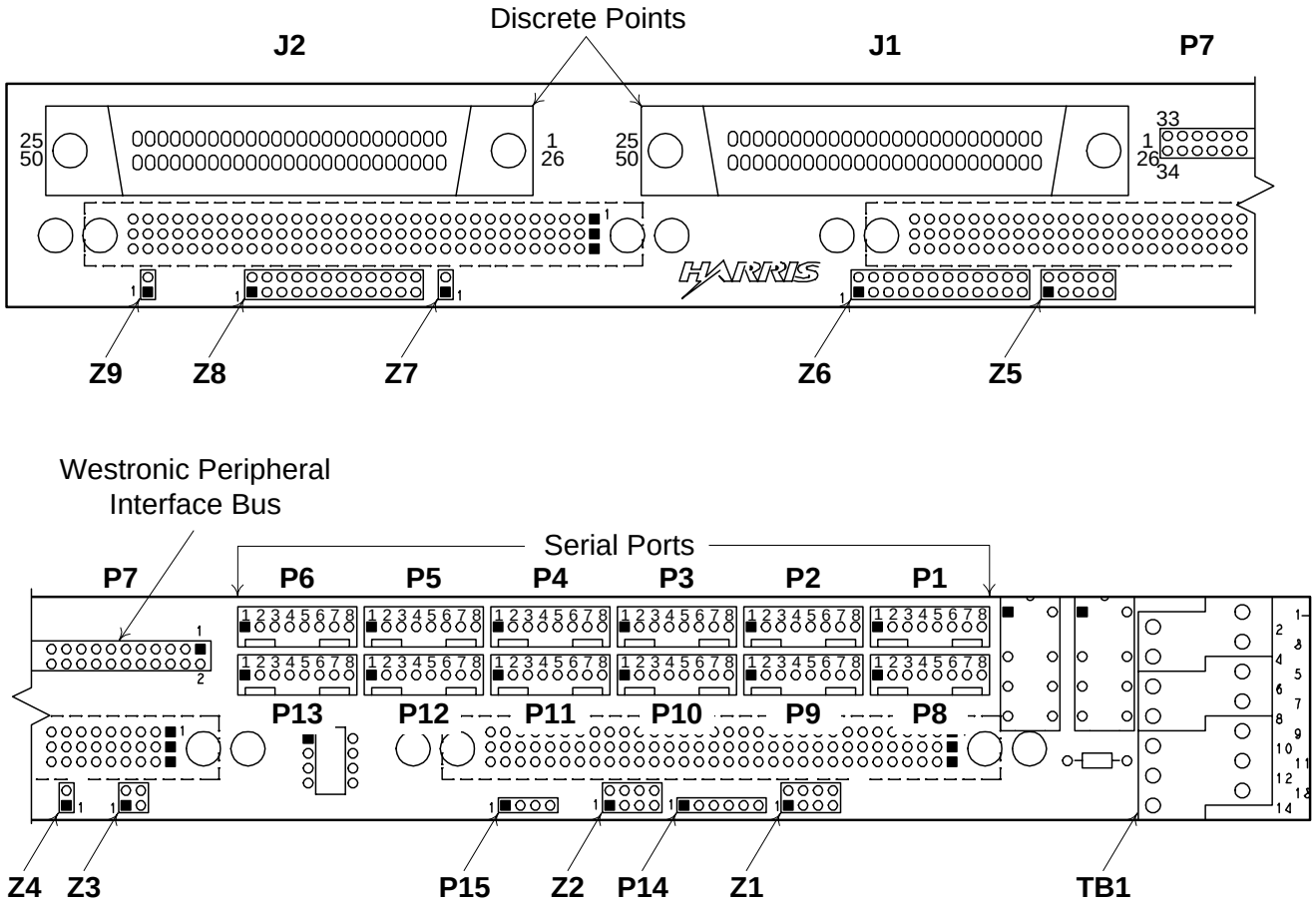

Figure 3-11 WS2000 Backplane Showing Rear Connectors and Jumper Block Locations

The factory default is Form C. These interconnections to the network require selecting the appropriate Form A/C operation. Jumper block Z6 sets the form operation for the first eight control outputs. Jumper block Z8 sets the form operation for the second set of control outputs, points 9 through 16. Figure 3-12 illustrates the strapping options on Z6 and Z8 using Control Points 1, 2, 9, and 10 as examples.

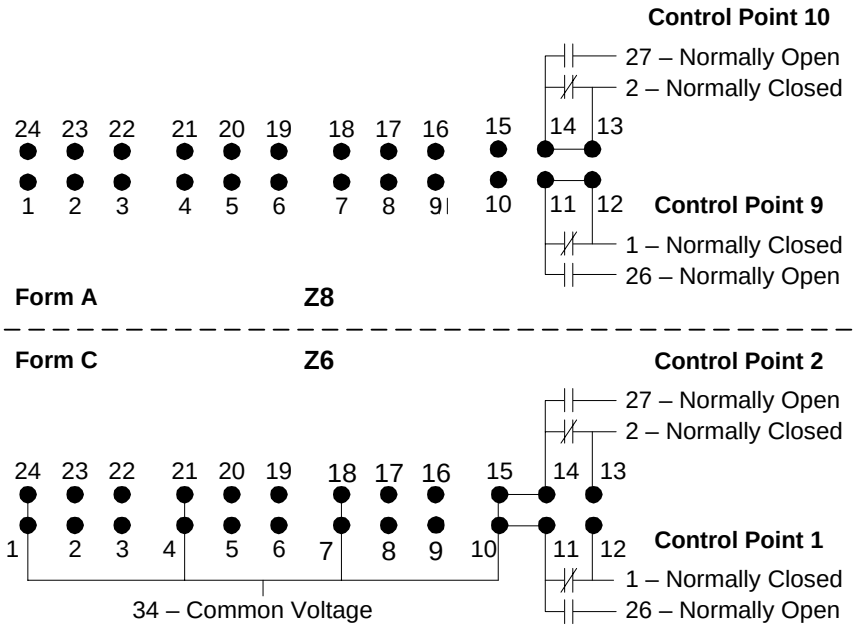

Figure 3-12 Functional View of Z6 and Z8 Strapping

When configured as Form A, each control point provides one isolated pair (normally open).

When configured as Form C, each control point provides one Normally Open (NO) contact and one Normally Closed (NC) contact. Each contact provides a connection to a common voltage pin provided for each set of eight points. Figure 3-13 shows the strapping options for all 16 control points at Z6 and Z8.

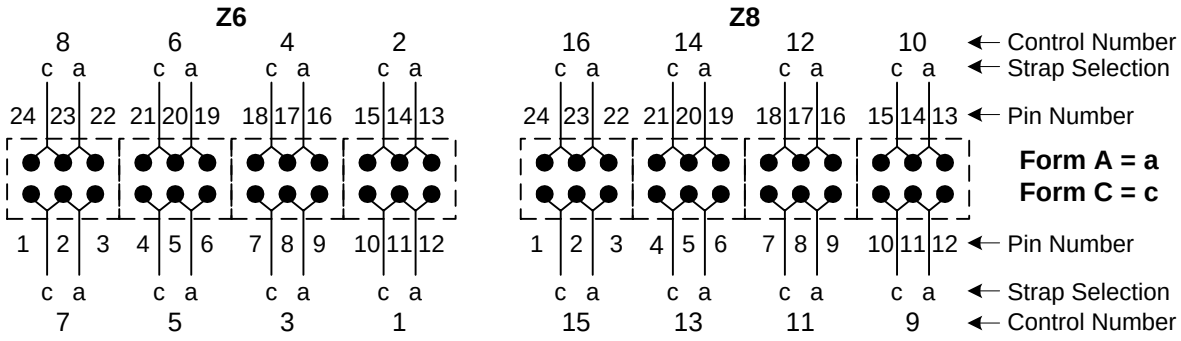

Figure 3-13 Z6/Z8 Form A/Form C Jumper Strap Arrangements

Caution: Do not insert any straps on Z8 for controls that are replaced by analog inputs.

3.4.3.5.2 WPIB Addresses

Local discrete alarm capacity can increase from a maximum of 64 alarms and 16 control relay outputs on a single WS2000 to a total of 512 alarms and 128 control relays by using Westronic discrete expanders. A single WS2000 can handle a maximum of seven discrete expanders.

The WS2000 and discrete expanders all use identical bin and back-planes. Z5 of each discrete expander requires the strap settings shown in Table 3-9 when they are used with the WS2000 remote. The WS2000 has no straps on its jumper block Z5, indicating it is the master or main unit.

Table 3-9 Z5 WPIB Address Jumper Strap Settings

Expander	WPIB Address	Z5 Pins
0 (WS2000)	00	None
1	08	5–6
2	10	4–7
3	18	4–7,5–6
4	20	3–8
5	28	3–8,5–6
6	30	3–8,4–7
7	38	3–8,4–7,5–6

3.4.3.5.3 Serial Port Terminations

Applications using RS-232 interface operation require no straps on jumper blocks Z1 – Z3. However, if a connected port uses RS-422 or RS-485 interface operation, the port interface requires termination resistors on the receive side. Install the appropriate jumper straps on blocks Z1 – Z3 to provide termination resistors for Channels 1 – 9. Table 3-10 lists the jumper strap arrangements for blocks Z1 – Z3.

Recommendation: Install terminating resistors on the receiver terminal of all RS-422 circuits and on the furthest receiver terminal of an RS-485 circuit.

Table 3-10 Z1, Z2, Z3 Jumper Strap Arrangements for RS-422/RS-485 Receiver Termination

Pins	Function		
	Z1	Z2	Z3
1 – 8	Chan 9 Rx	Chan 2 Rx	N/A
2 – 7	Chan 8 Rx	Chan 3 Rx	N/A
3 – 6	Chan 7 Rx	Chan 4 Rx	N/A
4 – 5	Chan 6 Rx	Chan 5 Rx	N/A
1 – 4	N/A	N/A	Chan 1 CTS (Note)
2 – 3	N/A	N/A	Chan 1 Rx (Note)

Note: Backplanes from Revision B onward have a 4-pin Z3 block. Revision A backplanes used an 8-pin block like Z1 and Z2. Strap options for these version backplanes are as follows: Chan 1CTS (1 – 8), Chan 1 Rx (2 – 7), Chan 1 RxC (3 – 6), and Chan 1 TxC (4 – 5).

3.4.4 Cabling the WS2000

Figure 3-11, a rear view of the WS2000 unit, shows how the connections are grouped on the WS2000 backplane. Figure 3-14 Illustrates the various connection options described in this section. This section provides connection details for cabling the WS2000 to the network and office equipment in the following order (the order is not critical; vary according to your needs/optional equipment):

- Make all RS-232/RS-422/RS-485 serial connections using eight-pin connectors P1 through P6 and P8 through P13.
- Connect all discrete inputs through 50-pin connectors J1 and J2.
- Connect discrete expanders through connector P7 using the WPIB.
- Make power, local annunciator (the external alarm panel or the universal alarm panel), and host modem connections at TB1.
- Connect optional accessory interface equipment, such as the Telzon termination panel, the front-access wire-wrap kit, or the rear-access wire-wrap kit.

  Note: The front-access wire-wrap kit handles serial port, discrete input/control output, and TB1 connections. The rear-access wire-wrap kit and the Telzon termination block handle serial port and discrete input/control output connections.

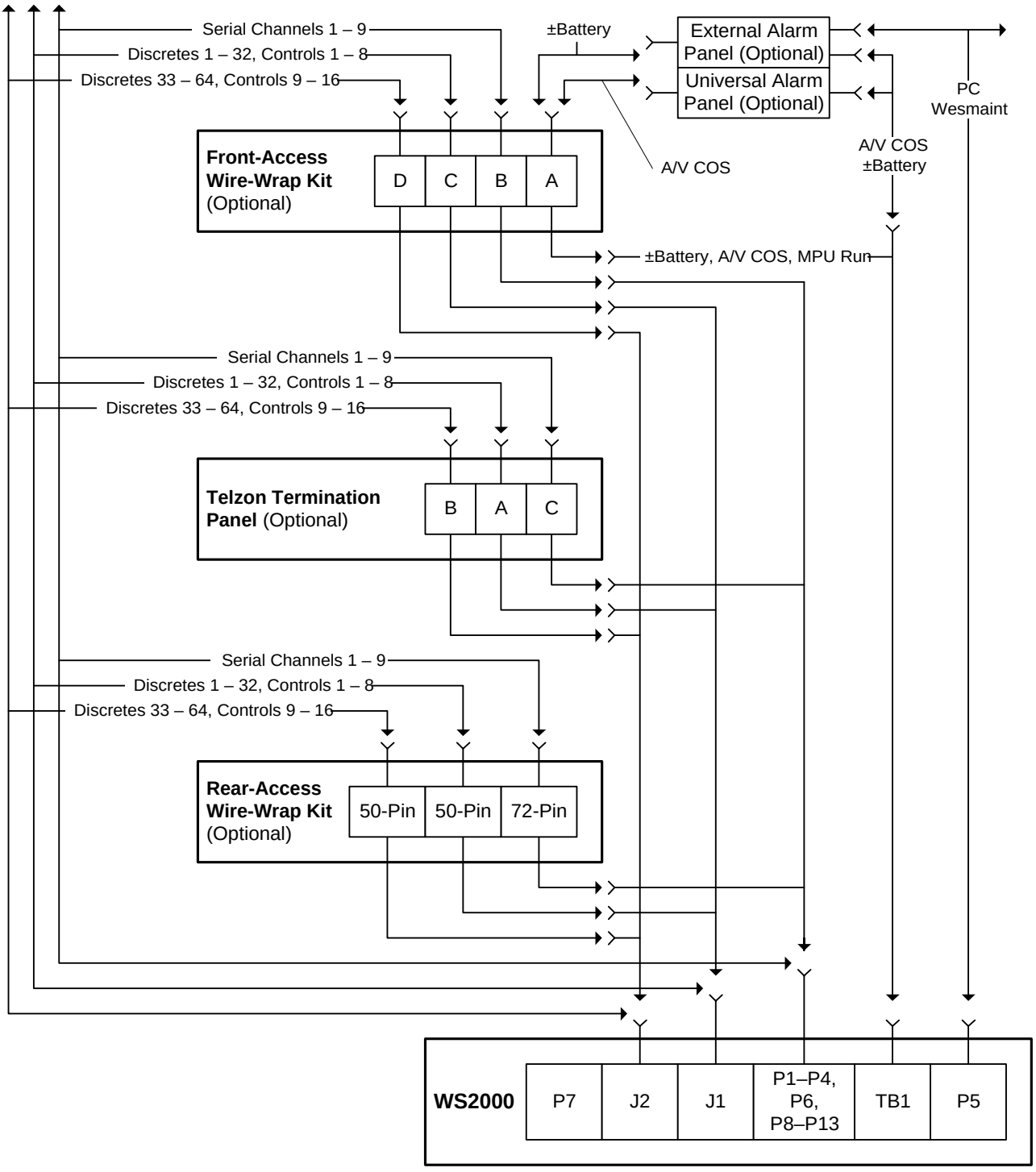

Figure 3-14 Overview of the WS2000 System Connections

3.4.4.1 Front-Panel Craft Port

Pinout information and pin layout for the front-panel DB25 Craft port connector (JB3) appears in Figure 3-15. Table 3-11 includes pinout details for Craft port connector P5 (Methode).

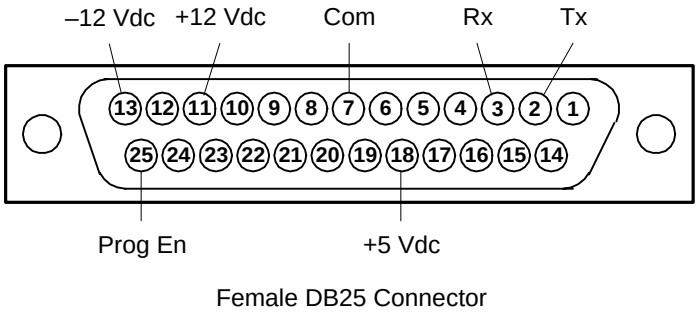

Figure 3-15 Front-Panel Connector JB3

3.4.4.2 Wesmaint Connections

Additional considerations about connecting the Craft port to any of the available Wesmaint configurations is in **Cabling**on Page 5-1.

3.4.4.3 Serial Port Connections

Serial port cable assemblies require Methode connectors (PNs 1300-108-424 or 30F-108-424 or Westronic PN 620-0077). Methode hand insertion tool, JT-11-100-ST (Westronic PN 990-0150), is required to build these cables.

Each serial cable must be fitted with a ferrite Electromagnetic Interference (EMI) filter (provided with the W23000) during installation. The cable must wrap a minimum of two times around the ferrite and snap securely shut.

Caution: These connectors are designed for #24 AWG solid wiring. Use of smaller or larger diameter wiring, multiple terminations in the same contact, or stranded wire can result in intermittent connections.

Figure 3-16 illustrates the portion of the backplane containing the serial port connectors. The figure shows the port locations, their channel associations, the pin designations, and the type of serial interface.

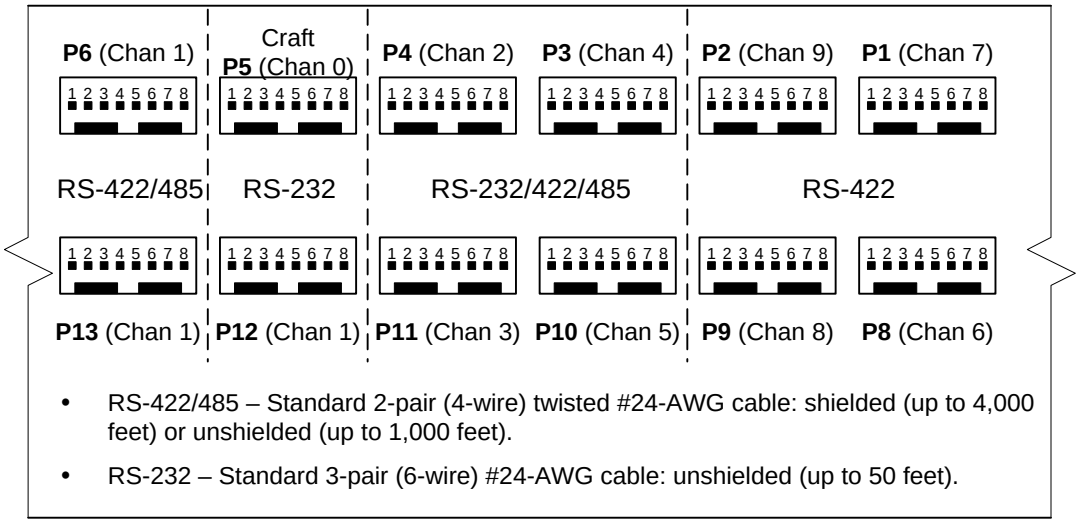

Figure 3-16 Rear View of WS2000 Serial Port Connectors (Methode)

3.4.4.3.1 Host Port

Channel 1 (host port) uses P6 if configured for an RS-422 or RS-485 interface and P12 if configured for an RS-232 interface. When the host port uses an external modem connected to P12, use the pinout information shown in Figure 3-17. When WS2000 has an internal 202T modem, make the host port connections at TB1 (Figure 3-21).

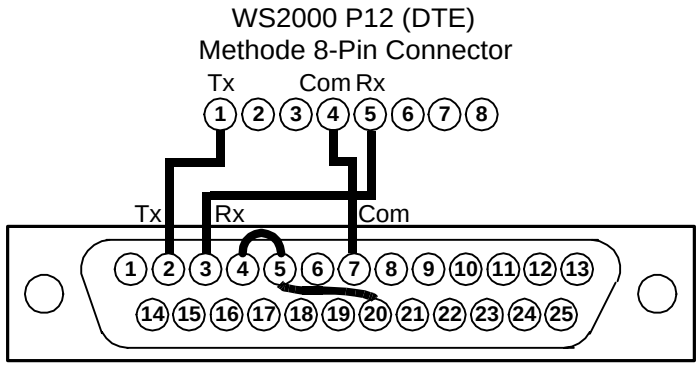

Figure 3-17 Host Port Modem Connections

3.4.4.3.2 Serial Data Collection Ports/Craft Port

The serial data collection ports use different pinouts, depending on the chosen interface type.

Table 3-11 lists the cable interface data for the serial inputs and outputs, and the rear port for Craft maintenance (P5). Figure 3-18 diagrams the serial port interface connections for direct connection or connection through external modems.

Table 3-11 Cabling Interface Data for Serial Input/Output

Conn	Chan	Intfc RS-	Methode Pin Number							
			1	2	3	4	5	6	7	8
P1	7	422	–	–	–	Com	Rx–	Rx+	Tx–	Tx+
P2	9	422	–	–	–	Com	Rx–	Rx+	Tx–	Tx+
P3	4	232	Tx	RTS	CTS	Com	Rx	DCD	–	–
		422	–	–	–		Rx–	Rx+	Tx–	Tx+
		485	–	–	–		Rx–	Rx+	Tx–	Tx+
P4	2	232	Tx	RTS	CTS	Com	Rx	DCD	–	–
		422	–	–	–		Rx–	Rx+	Tx–	Tx+
		485	–	–	–		Rx–	Rx+	Tx–	Tx+
P5	Craft	232	Tx	Rx	Prog En	Com	–12 Vdc	+5 Vdc	+12 Vdc	–
P6	1	422	–	–	–	Com	Rx–	Rx+	Tx–	Tx+
		485	RTS–	RTS+	–	Com	Rx–	Rx+	Tx–	Tx+
P8	6	422	–	–	–	Com	Rx–	Rx+	Tx–	Tx+
P9	8	422	–	–	–	Com	Rx–	Rx+	Tx–	Tx+
P10	5	232	Tx	RTS	CTS	Com	Rx	DCD	–	–
		422	–	–	–		Rx–	Rx+	Tx–	Tx+
		485	–	–	–		Rx–	Rx+	Tx–	Tx+
P11	3	232	Tx	RTS	CTS	Com	Rx	DCD	–	–
		422	–	–	–		Rx–	Rx+	Tx–	Tx+
		485	–	–	–		Rx–	Rx+	Tx–	Tx+
P12	1	232	Tx	RTS	CTS	Com	Rx	DCD	–	–

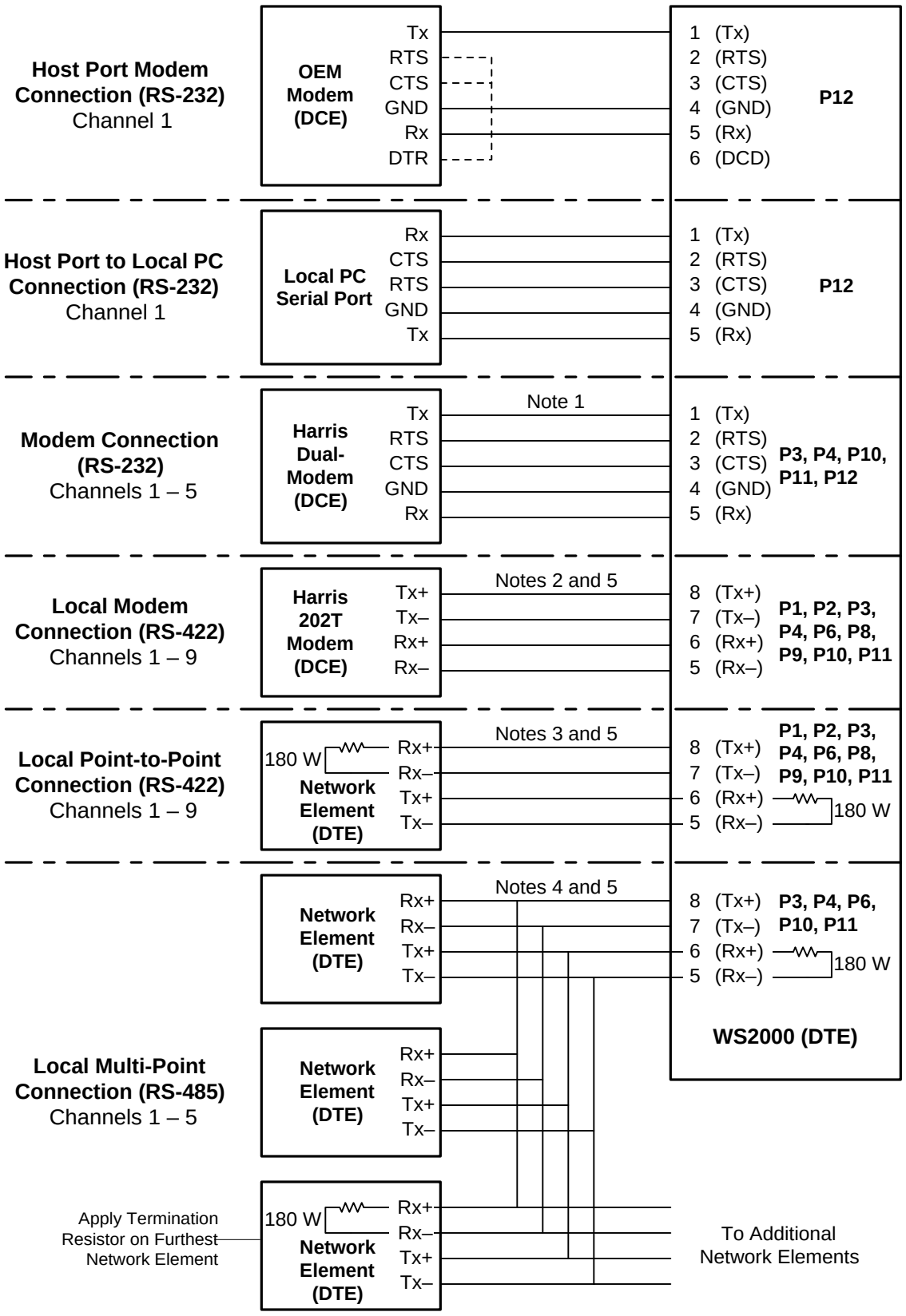

Figure 3-18 Serial Port Interface Connections for WS2000

The following notes are to Figure 3-18, *Serial Port Interface Connections for WS2000*.

1. The host port (Channel 1) and four of the serial data collection ports (Channels 2 – 5) can interconnect to networks using RS-232. This connection is suitable for use with external clear-channel modems, such as the 202T. If the modem to connect is DCE, the WS2000 transmit signal lines terminate into the modem transmit outputs and the WS2000 receive signal lines terminate into the modem receive inputs (that is, straight-through connection) because the WS2000 is considered DTE equipment.

4. The host port (Channel 1) and all eight serial data collection ports (Channels 2 – 9) can interconnect to networks using RS-422. This connection is suitable for use with 202T modems. If the modem to connect is DCE, the WS2000 transmit signal lines terminate into the modem transmit outputs and the WS2000 receive signal lines terminate into the modem receive inputs (that is, straight-through connection).

5. Any of the WS2000 serial data collection ports and the host port can interconnect to network elements using RS-422. The WS2000 is considered Data Terminal Equipment (DTE). If the network element to be connected is DTE, the WS2000 transmit signal lines terminate into the network element receive inputs and the WS2000 receive signal lines terminate into the network element transmit outputs (that is, transmit-receive crossover connection).

6. Five of the WS2000 serial data ports (Channels 1 – 5) can interconnect to network elements using RS-485. Connections are the same as for the RS-422 interface. Observe that for a multi-drop RS-485 interface, the end network element should have terminating resistors installed for the channel. The intermediate units do not require channel termination.

7. Common terminology for balanced line connections are plus (+) and minus (–). Other naming conventions are as follows:
   - Plus = tip (T) = A = true (T)
   - Minus = ring (R) = B = false (F) = invert

3.4.4.4 Discrete and Analog Connections

WS2000 backplane connectors J1 and J2 handle the cable connections for discrete inputs and control outputs. *If you are connecting an optional analog input board, apply the analog inputs to J2 in place of control outputs 9 through 16.* Set each control output as Form A or Form C contact closure. See Figure 3-13 for connector pin layouts. As discussed in *Backplane* on Page 3-14, jumper block Z6 determines contact configurations for control outputs 1 through 8 and jumper block

Z8 determines contact configurations for control outputs 9 through 16. Pin 34 on connectors J1 and J2 provides Form C control common voltage. Also see discussion of Form A and Form C in **Discrete Interfaces** on Page 2-3.

Figure 3-19 shows a rear view of the WS2000 with the connector layouts.

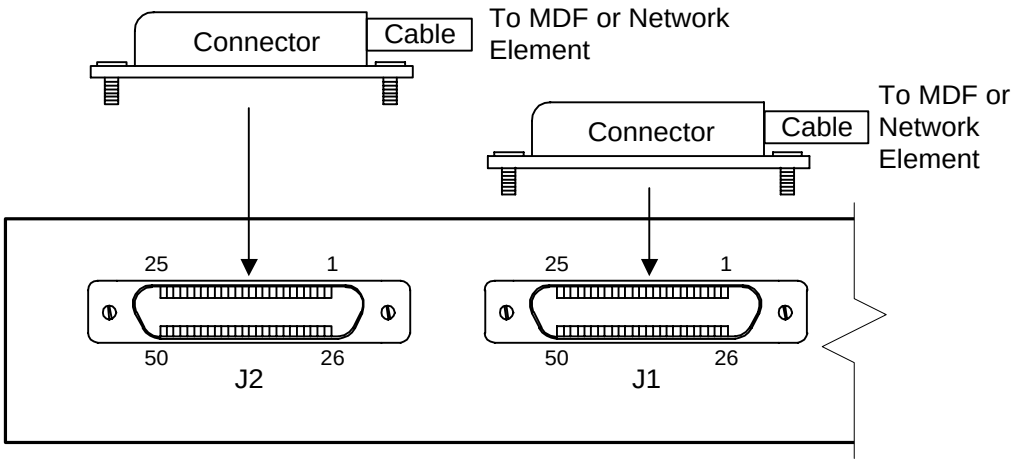

Figure 3-19 Rear View of the WS2000 Discrete Connectors

Connector

Delta 50-pin male connector. Use either of the following connector assemblies:

- Westronic 50-pin connector assembly: PN 620-0078
- Cinch: PN 97-12500-180 or 97-12500-181

Cable

Standard 25-pair (50 wires) unshielded telephone cable; #24 AWG single-strand wire

Table 3-12 and Table 3-13 list the designations for the discrete interfaces in the rear terminations.

Table 3-12 Pinouts for WS2000 Discrete Interface Connector J1

Connector J1			
Function	**Pin**		**Function**
Control Output 1, Form C – NC	1	26	Control Output 1, Form A or C – NO
Control Output 2, Form C – NC	2	27	Control Output 2, Form A or C – NO
Control Output 3, Form C – NC	3	28	Control Output 3, Form A or C – NO
Control Output 4, Form C – NC	4	29	Control Output 4, Form A or C – NO
Control Output 5, Form C – NC	5	30	Control Output 5, Form A or C – NO
Control Output 6, Form C – NC	6	31	Control Output 6, Form A or C – NO
Control Output 7, Form C – NC	7	32	Control Output 7, Form A or C – NO
Control Output 8, Form C – NC	8	33	Control Output 8, Form A or C – NO
Ground	9	34	Control Output Common Voltage
Status/Alarm Input 1	10	35	Status/Alarm Input 2
Status/Alarm Input 3	11	36	Status/Alarm Input 4
Status/Alarm Input 5	12	37	Status/Alarm Input 6
Status/Alarm Input	13	38	Status/Alarm Input 8
Status/Alarm Input 9	14	39	Status/Alarm Input 10
Status/Alarm Input 11	15	40	Status/Alarm Input 12
Status/Alarm Input 13	16	41	Status/Alarm Input 14
Status/Alarm Input 15	17	42	Status/Alarm Input 16
Status/Alarm Input 17	18	43	Status/Alarm Input 18
Status/Alarm Input 19	19	44	Status/Alarm Input 20
Status/Alarm Input 21	20	45	Status/Alarm Input 22
Status/Alarm Input 23	21	46	Status/Alarm Input 24
Status/Alarm Input 25	22	47	Status/Alarm Input 26
Status/Alarm Input 27	23	48	Status/Alarm Input 28
Status/Alarm Input 29	24	49	Status/Alarm Input 30
Status/Alarm Input 31	25	50	Status/Alarm Input 32

Table 3-13 Pinouts for WS2000 Discrete Interface Connector J2

Connector J2			
Function	**Pin**		**Function**
Control Output 9, Form C – NC or Analog 1+	1	26	Control Output 9, Form A or C – NO or Analog 1–
Control Output 10, Form C – NC or Analog 2+	2	27	Control Output 10, Form A or C – NO or Analog 2–
Control Output 11, Form C – NC or Analog 3+	3	28	Control Output 11, Form A or C – NO or Analog 3–
Control Output 12, Form C – NC or Analog 4+	4	29	Control Output 12, Form A or C – NO or Analog 4–
Control Output 13, Form C – NC or Analog 5+	5	30	Control Output 13, Form A or C – NO or Analog 5–
Control Output 14, Form C – NC or Analog 6+	6	31	Control Output 14, Form A or C – NO or Analog 6–
Control Output 15, Form C – NC or Analog 7+	7	32	Control Output 15, Form A or C – NO or Analog 7–
Control Output 16, Form C – NC or Analog 8+	8	33	Control Output 16, Form A or C – NO or Analog 8–
Ground	9	34	Control Output Common Voltage
Status/Alarm Input 33	10	35	Status/Alarm Input 34
Status/Alarm Input 35	11	36	Status/Alarm Input 36
Status/Alarm Input 37	12	37	Status/Alarm Input 38
Status/Alarm Input 39	13	38	Status/Alarm Input 40
Status/Alarm Input 41	14	39	Status/Alarm Input 42
Status/Alarm Input 43	15	40	Status/Alarm Input 44
Status/Alarm Input 45	16	41	Status/Alarm Input 46
Status/Alarm Input 47	17	42	Status/Alarm Input 48
Status/Alarm Input 49	18	43	Status/Alarm Input 50
Status/Alarm Input 51	19	44	Status/Alarm Input 52
Status/Alarm Input 53	20	45	Status/Alarm Input 54
Status/Alarm Input 55	21	46	Status/Alarm Input 56
Status/Alarm Input 57	22	47	Status/Alarm Input 58
Status/Alarm Input 59	23	48	Status/Alarm Input 60
Status/Alarm Input 61	24	49	Status/Alarm Input 62
Status/Alarm Input 63	25	50	Status/Alarm Input 64

3.4.4.5 Discrete Expander Cabling

Figure 3-20 shows the parallel interface and expansion bus of a WS2000 to discrete expanders through connector P7. The WS2000 can control a maximum of seven discrete expanders through a 34-conductor ribbon cable used for the connection. One end of the cable connects to P7 of the WS2000 unit while the next connector in line connects to P7 of a discrete expander. If the cable has additional unused connectors, the remaining cable can be rolled up and later unrolled to connect added discrete expanders.

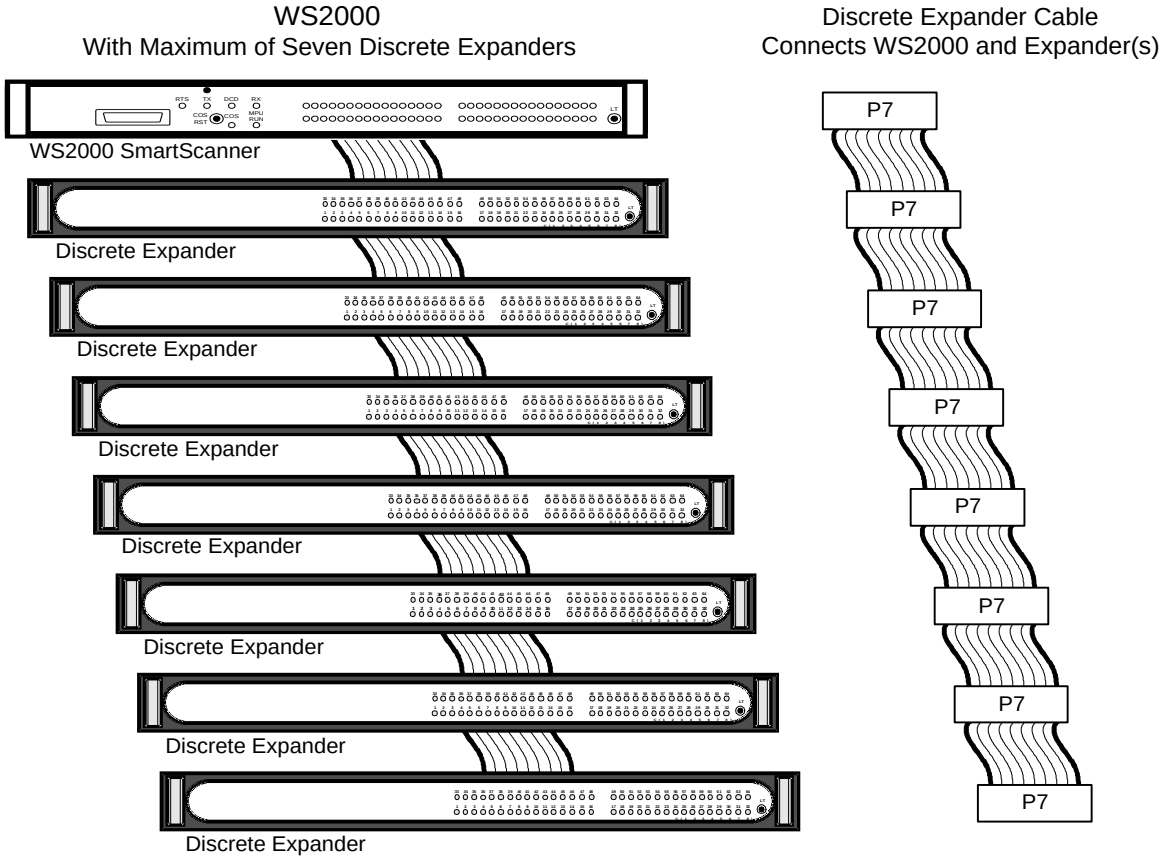

Figure 3-20 WS2000 to Discrete Expander Interface Connections

Table 3-14 lists cables having 2 through 8 connectors. Order from Westronic using the listed order number. Table 3-15 lists the pinout information for the ribbon cable.

Table 3-14 Westronic Peripheral Interface Bus (WPIB) Cable Part Numbers

PN	Description
963-0003	WPIB cable, 2 connectors: 1 expander
963-0004	WPIB cable, 3 connectors: 2 expanders
963-0005	WPIB cable, 4 connectors: 3 expanders
963-0006	WPIB cable, 5 connectors: 4 expanders
963-0007	WPIB cable, 6 connectors: 5 expanders
963-0012	WPIB cable, 7 connectors: 6 expanders
963-0013	WPIB cable, 8 connectors: 7 expanders

Table 3-15 Pinout Information for the Westronic Peripheral Interface Bus (WPIB) P7

Pin	Function	Pin	Function
1	–12 Vdc	18	AO0
2	+12 Vdc	19	0 Vdc
3	+5 Vdc	20	AO4
4	+V1 (Control Relay Coil Voltage)	21	AO3
5	I/O RST	22	AO2
6	ID	23	AO7
7	STB	24	AO6
8	DI1	25	AO5
9	DI0	26	DO1
10	–	27	DO0
11	DI4	28	0 Vdc
12	DI3	29	DO4
13	DI2	30	DO3
14	DI7	31	DO2
15	DI6	32	DO7
16	DI5	33	DO6
17	AO1	34	DO5

3.4.4.6 Terminal Board TB1 Connections

Figure 3-21 shows connections to TB1.

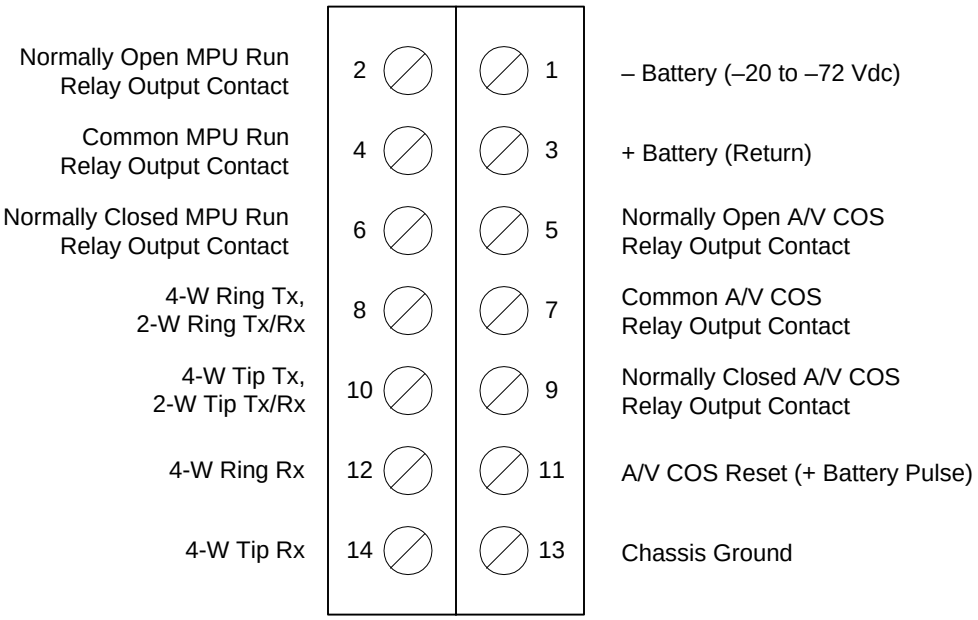

Use #14 – #24 AWG Solid Wire for All TB1 Connections

A/V	Audio Visual
AWG	American Wire Gauge
COS	Change of State
MPU	Microprocessor Unit

Figure 3-21 WS2000 Rear Connector TB1

3.4.4.7 Optional Devices

The following discusses configuration and connection for the following optional, ancillary equipment:

- Pulse accumulators
- Rack-mount modem
- External audible/visual alarm panel
- Universal alarm panel
- Telzon termination panel
- Front-access wire-wrap kit
- Rear-access wire-wrap kit

3.4.4.7.1 Pulse Accumulators

Pulse accumulator inputs displace serial connections for Channels 6 – 9. Wire the accumulator inputs to the serial connectors as shown in Table 3-16.

Table 3-16 Pulse Accumulator Input Connections

Accum Input	Serial Connector (Chan)
1	P8-8 (6)
2	P8-7 (6)
3	P1-8 (7)
4	P1-7 (7)
5	P9-8 (8)
6	P9-7 (8)
7	P2-8 (9)
8	P2-7 (9)

3.4.4.7.2 Rack-Mount Modem

The optional rack-mount modem (Figure 3-22), used on the data collection channels, is equipped with the 202T/CCITT V.23 modem expansion card. The modem is a standard one-increment 19-inch rack-mount panel with the following dimensions: 19.0 inches (w) by 1.75 inches (h) by 2.0 inches (d). The assembly includes 23-inch rack-mount adapters.

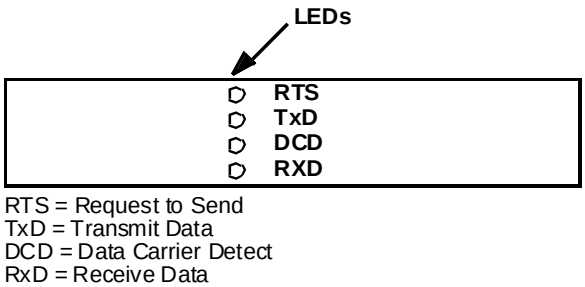

Figure 3-22 Front View of the Rack-Mount Modem

Main Board Configuration

The rack-mount modem main board (PN 540-0090), shown in Figure 3-23, has the factory-set strap options specified in Table 3-17.

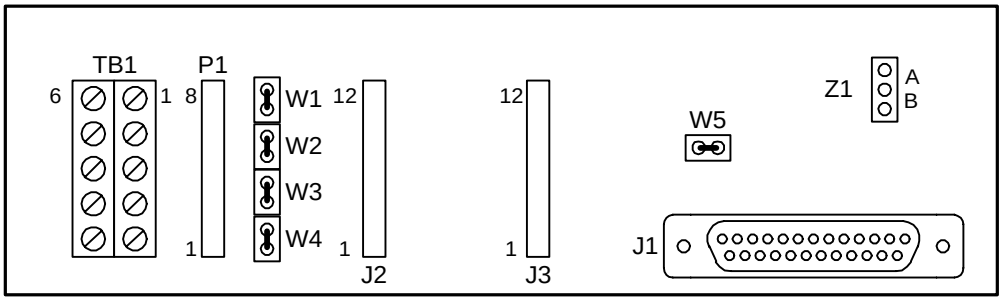

Figure 3-23 Rack-Mount Modem Main Board

Table 3-17 Factory Strap Options for Rack-Mount Modem Main Board

Jumper	Strapping	Function
Z1	No strap	Normal RTS operation
	A	Continuous carrier when DTE equipment is connected and powered
	B	Continuous carrier
W1 – W5	Artwork circuitry	Not applicable to WS2000 applications

Figure 3-24 shows terminal block TB1 pinouts on the rack-mount modem assembly. The 4-wire 202T connection uses Pins 1, 2, 3, and 4; the 2-wire connection uses Pins 1 and 2. Use #14 – #24 AWG wire for the power connection.

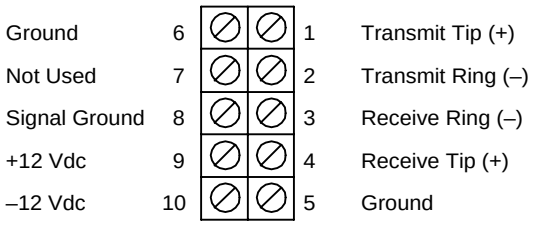

Figure 3-24 Rack-Mount Modem TB1 Pinouts

Cable Connections

A special cable (PN 977-0032) provides power and digital signals for the rack-mount modem from the WS2000. One end of this cable fans out into two Methode connectors: J4 and J5. Older versions of this cable labeled these two connectors as J1 and J2, respectively. The other end of the cable has a single male DB25 connector (P1). (If a rack-mount modem is used along with a rack-mount hardware Wesmaint, another cable, PN 977-T055, is available that provides power and data for both devices.)

Cable connector J5 (J2 of the older version cable) connects to WS2000 P5 to provide ±12 Vdc power.

Cable connector J4 (J1) connects to the selected WS2000 data collection channel (Channel 2 – Channel 5) Methode connector (P3, P4, P10, or P11). This connection establishes the RS-232 signal channel between the WS2000 and the modem module.

Cable connector P1, the male DB25 connector, connects to J1 on the rack-mount modem (see Figure 3-23). Table 3-18 provides pinout information for the DB25 connector at J1 of the rack-mount modem.

Table 3-18 Connector J1 DB25 Pinouts

Pin	Function
2	Transmit In
3	Receive Out
4	Request to Send (RTS)
5	Clear to Send (CTS)
6	Data Set Ready (DSR)
7	Common
8	Data Carrier Detect (DCD)
9	+12 Vdc
10	–12 Vdc
11	+12 Vdc
13	–12 Vdc
20	Data Terminal Ready (DTR)
22	Ring Indicator (RI)

Table 3-19 shows the point-to-point wiring from TB1 on the rack-mount modem to a remote site (downstream) WS2000 unit. This cable connection, shown in the lower part of Figure 3-25, allows incoming information to transfer from a remote site to the WS2000 system over a 4-wire voice-frequency (VF) circuit.

Table 3-19 Connection Between Rack-Mount Modem and WS2000 Units

From Rack-Mount Modem		To WS2000	
TB1-1	Tx+ (Tip)	TB1-14	Rx+ (Tip)
TB1-2	Tx– (Ring)	TB1-12	Rx– (Ring)
TB1-3	Rx– (Ring)	TB1-8	Tx– (Ring)
TB1-4	Rx+ (Tip)	TB1-10	Tx+ (Tip)

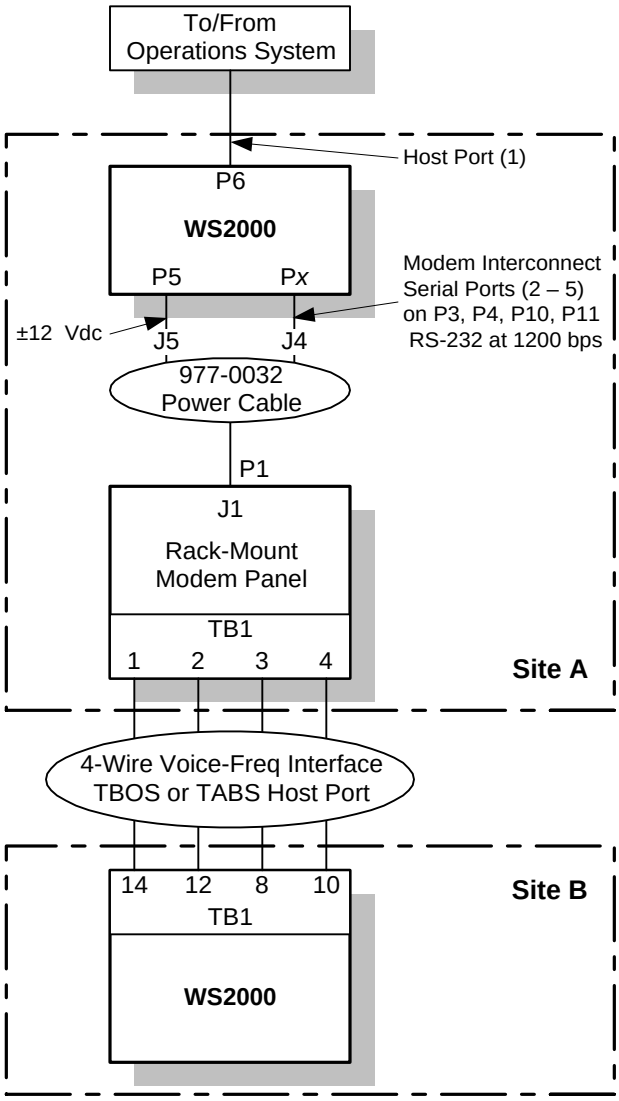

Figure 3-25 WS2000 and Rack-Mount Modem Interconnections

3.4.4.7.3 External Audible/Visual Alarm Panel

The Westronic external audible/visual alarm panel connects to the COS (Change of State) relay outputs located on WS2000 TB1 to provide both audible and visual standing summary alarm indications. The external alarm panel is equipped with an audible annunciator, an audible alarm disable toggle switch, an **ACO** button, and an alarm summary LED. **P5 IN** receives power from WS2000 P5. **P5 OUT** passes the information on for use by other equipment, such as a PC Wesmaint. Figure 3-26 shows the front and rear panels while Table 3-20 details the TB1 and P5 pinouts.

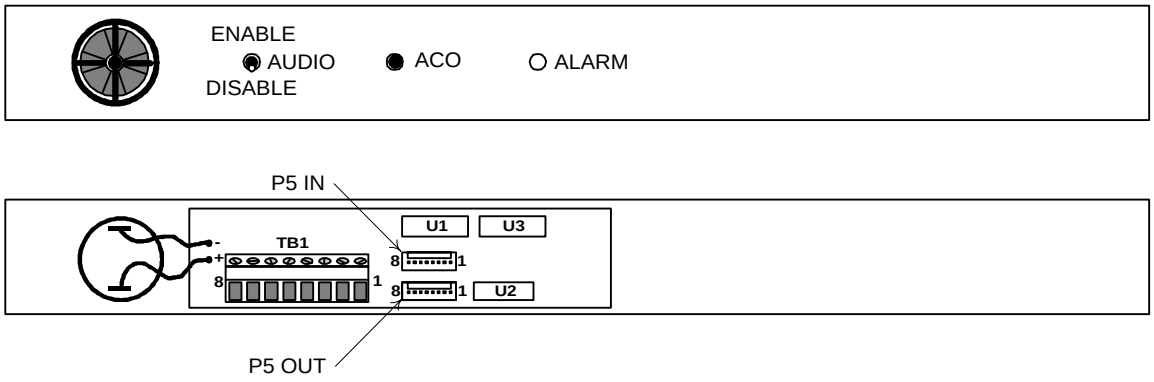

Figure 3-26 External Audible/Visual Alarm Panel

Table 3-20 Audible/Visual Alarm Panel Pinouts for TB1 and P5 IN/OUT

TB1		P5 IN/P5 OUT	
Pin	**Function**	**Pin**	**Function**
1	Audio Common	1	Tx
2	Audio Normally Closed	2	Rx
3	Audio Normally Open	3	Prog En
4	LED Common	4	Common
5	LED Normally Closed	5	–12 Vdc
6	LED Normally Open	6	+5 Vdc
7	COS Common	7	+12 Vdc
8	COS Normally Open	8	–

3.4.4.7.4 Universal Annunciator Panel

The Universal Annunciator Panel provides simultaneous audible and visual notification of alarms reported by a combination of up to eight Westronic remote telemetry units, such as WS1000, C1000, WS2000, and WS3000. The panel is equipped with an audible annunciator, power LED, audible alarm disable toggle switch, lamp test button, **ACO** button and eight individual alarm summary LEDs. Figure 3-27 shows the position of all front-panel controls and indicators, and rear-panel connectors.

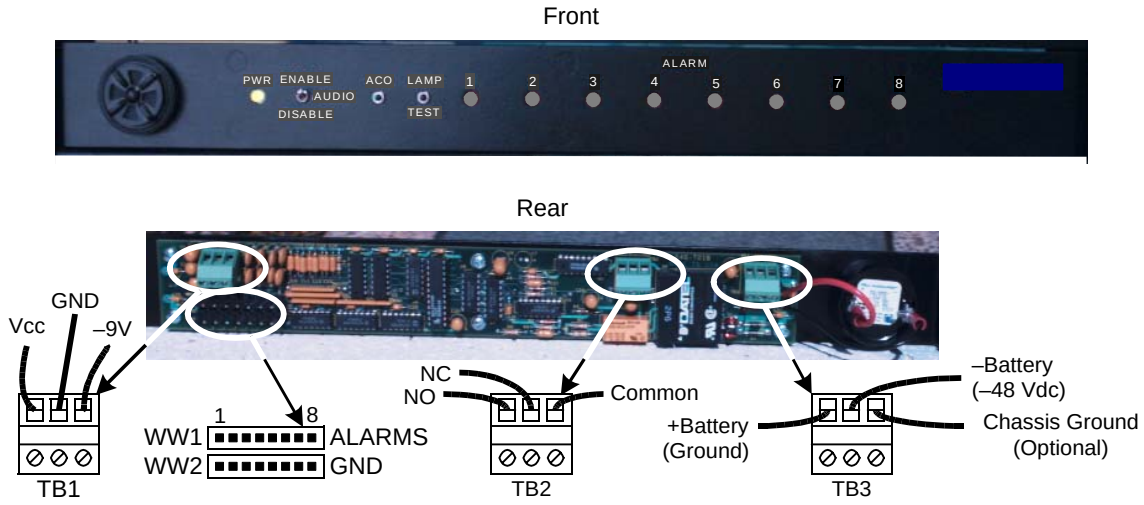

Figure 3-27 Universal Annunciator panel, Front and Rear Panels

Mounting

You can mount the 1-VU Universal Annunciator Panel in a standard 19- or 23-inch communications rack using the included adapters. You can also mount it flush with the rack or with a front extension by positioning the mounting ears toward the front or rear.

Electrical Connections

The panel connects to the COS relay terminals located on WS2000 rear-panel TB1 to provide both audible and visual standing alarm summary indications. The alarm output is enabled when the COS Normally Open contact (TB1-5) closes.

Caution: Exercise caution when making wiring connections to the rear of the annunciator panel. Small bits of wire or other debris can fall into units mounted lower in the equipment rack. Westronic is not responsible for damage caused by debris falling into this or other equipment.

TB1 is reserved for future expansion.

TB2 is an summary alarm output (normally open/normally closed contacts and common) for use with an external unit. **TB2** output, rated at 2 Amps (24 Watts maximum) switching, provides an alarm output any time the audible alarm activates.

Input power (–20 Vdc to –72 Vdc) connects to **TB3**. Pin 1 is +Batt, Pin 2 is –Batt, and Pin 3 is chassis ground.

Make alarm input connections at connectors **WW1** (**ALARMS**) and **WW2** (**GND**). Table 3-21 shows the input connections. For example, to make the WS2000 indicate on Alarm 7, a possible connection is as follows:

From WS2000	To UAP Alarm 7 LED
TB1-5 (COS Normally Open)	WW1-7 (**ALARMS**)
TB1-7 (COS Return)	WW2-7 (**GND**)

Table 3-21 Alarm Summary Input Connections

Connector	Front Panel ALARM LED							
	1	**2**	**3**	**4**	**5**	**6**	**7**	**8**
WW1 (**ALARMS**) Pin	1	2	3	4	5	6	7	8
WW2 (**GND**) Pin	1	2	3	4	5	6	7	8

Operation

The **PWR** LED lights green when power is properly applied and lights red when the power leads are reversed. Verify that **PWR** is green when applying power. Press the **LAMP TEST** pushbutton to test all LEDs.

When the annunciator panel receives a relay closure (alarm) from the WS2000, the appropriate front-panel **ALARM** LED lights red and the audible alarm sounds. The alarm output is available at **TB2** as normally open, normally closed, and common points. You can use **TB2** alarm output to indicate an alarm to another unit, such as an end-of-rack indicator. The audible alarm sounds until disabled by the audible alarm timer (available on units delivered after August, 1998), the alarm cutoff (**ACO**) button is pressed, or the alarm input clears. The alarm does not sound again until receipt of another alarm input. The **ALARM** LED remains lit until the alarm input is removed.

Moving the **AUDIO** switch to the down position (**DISABLE**) disables the audible alarm until returned to the up position (**ENABLE**) and has no other effect on panel operation, including the alarm output at **TB2**.

3.4.4.7.5 Telzon Termination Panel

The Telzon termination panel (Figure 3-28) provides front-panel wire-wrap access to all discrete and serial connections available on the WS2000 backplane.

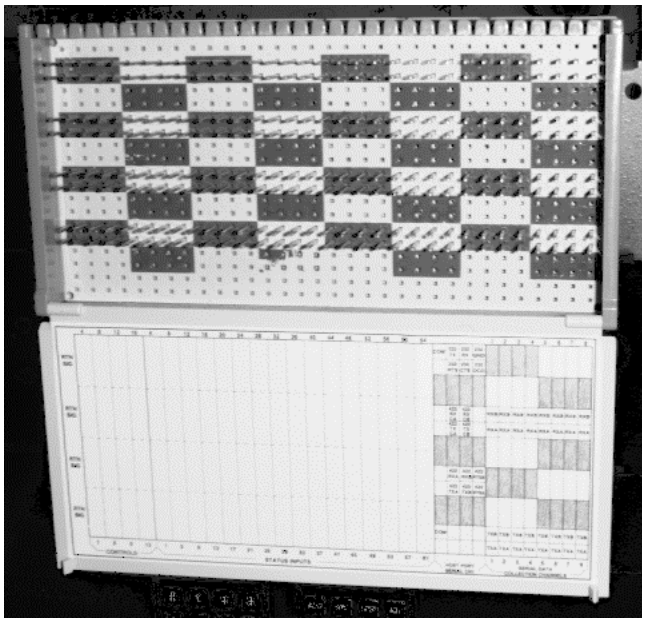

Figure 3-28 Telzon Block

The Telzon block comes in two configurations: 19 inches and 23 inches. The kits include cables and appropriate size mounting bars.

Table 3-22 lists part numbers for parts associated with the Telzon panels.

Table 3-22 Telzon Block Component Part Numbers

Item	Qty	Part No	Description
–	1	533-T030 533-T011	19-inch Telzon Panel 23-inch Telzon Panel
1	1	640-T002	Telzon Wire-Wrap Block
2	2	977-T003	3-foot Discrete I/O Cable (for connectors A and B)
3	1	977-T070	3-foot Serial I/O Cable (for connector C)
4	1	953-T003	23-inch Mounting Bar
5	1	953-T091	19-inch Mounting Bar

Connections and Cabling

Each Telzon termination panel has three connectors: two access the wire-wrap terminations for the discrete I/O and one accesses the wire-wrap terminations for serial and digital-host port communications. All three connectors are standard Delta-style female 50-pin connectors.

The panel connects through three 3-foot cables that are included with the Telzon panel. Two of the cables, which are used for discrete I/O connections, terminate with one male and one female, standard Delta-style, 50-pin, right-angle connectors. Each cable supports 32 discrete alarm/status inputs and eight discrete control outputs or analog inputs. Both cables are required, regardless of the number of discretes actually used. The third cable has one end that terminates with a standard female, Delta-style, 50-pin, right-angle connector and the other end "fans" out into 11 female, 8-pin, Methode connectors, which handle RS-232 and RS422/485 connections for the serial collection ports and the RS-422/TTL accumulator inputs (see Figure 3-29).

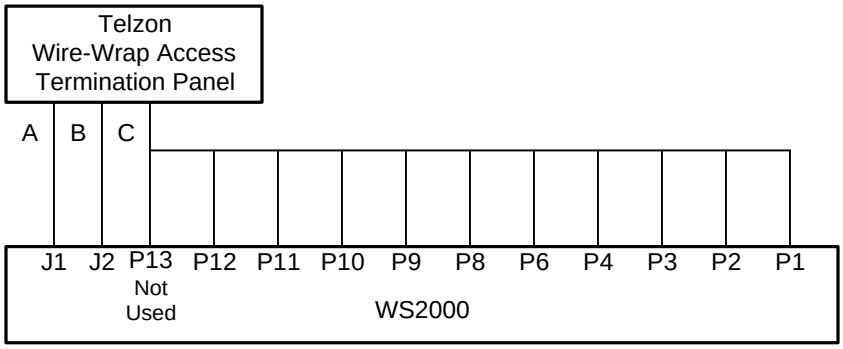

Figure 3-29 Remote and Telzon Termination Block Interconnection

Table 3-23 shows the wire color-pair combinations identifying which serial connection from the Telzon cable terminates to the mating WS2000 unit "P" plug.

Table 3-23 Telzon Serial Connector Identification and Wire Colors

WS2000 Plug	Serial Channel/ Interface Type	Telzon Cable Wire
P1	Serial Channel 7 (TBOS)	Orange/Yellow, Orange/Red
P2	Serial Channel 9 (TBOS)	Brown/Yellow, Brown/Red
P3	Serial Channel 4 (TBOS/TABS)	Green/Black, Green/White
P4	Serial Channel 2 (TBOS/TABS)	Blue/Black, Blue/White
P6	Serial Channel 1 RS-422 (TBOS)	Slate/Black, Slate/White, Slate/Red
P8	Serial Channel 6 (TBOS)	Blue/Yellow, Blue/Red
P9	Serial Channel 8 (TBOS)	Green/Yellow, Green/Red
P10	Serial Channel 5 (TBOS/TABS)	Brown/Black, Brown/White
P11	Serial Channel 3 (TBOS/TABS)	Orange/Black, Orange/White
P12	Serial Channel 1 RS-232 (TABS)	Green/Violet, Brown/Violet, Slate/Violet
P13	Serial Channel 1 RS-485 (Not Used)	Slate/Yellow, Slate/Violet

Configuration

The Telzon panel can route signals in applications using a maximum of 64 discrete alarm/status inputs, 16 discrete control outputs, and eight serial data collection ports. Digital host communications can also route through the Telzon panel. Figure 3-30 shows the interconnections. Figure 3-31 details the bottom portion of Figure 3-30 (left side of the actual diagram as it appears on the Telzon block).

Telzon Termination Panel Wire-Wrap Features

Each discrete input on the Telzon termination panel is a dry contact input with two wire-wrap pins for connection. One pin is the dry contact input while the other is a return. Each group of 32 returns buss together and terminate onto a common (COM) wire-wrap pin. Each discrete control output is a relay closure to two isolated contacts.

Four standard serial collection ports (Channels 2 – 5, which are TBOS/TABS) can connect as RS-232 or RS-422/RS-485. RS-422/RS-485 connections have four wire-wrap pins: Transmit and Receive Tip/Ring. The digital host communications port generally connects as RS-232 or RS-422. The RS-232 connection uses six wire-wrap pins:

- Transmit (Tx)
- Receive (Rx)
- Ground (Gnd)
- Request to Send (RTS)
- Clear to Send (CTS)
- Data Carrier Detect (DCD)

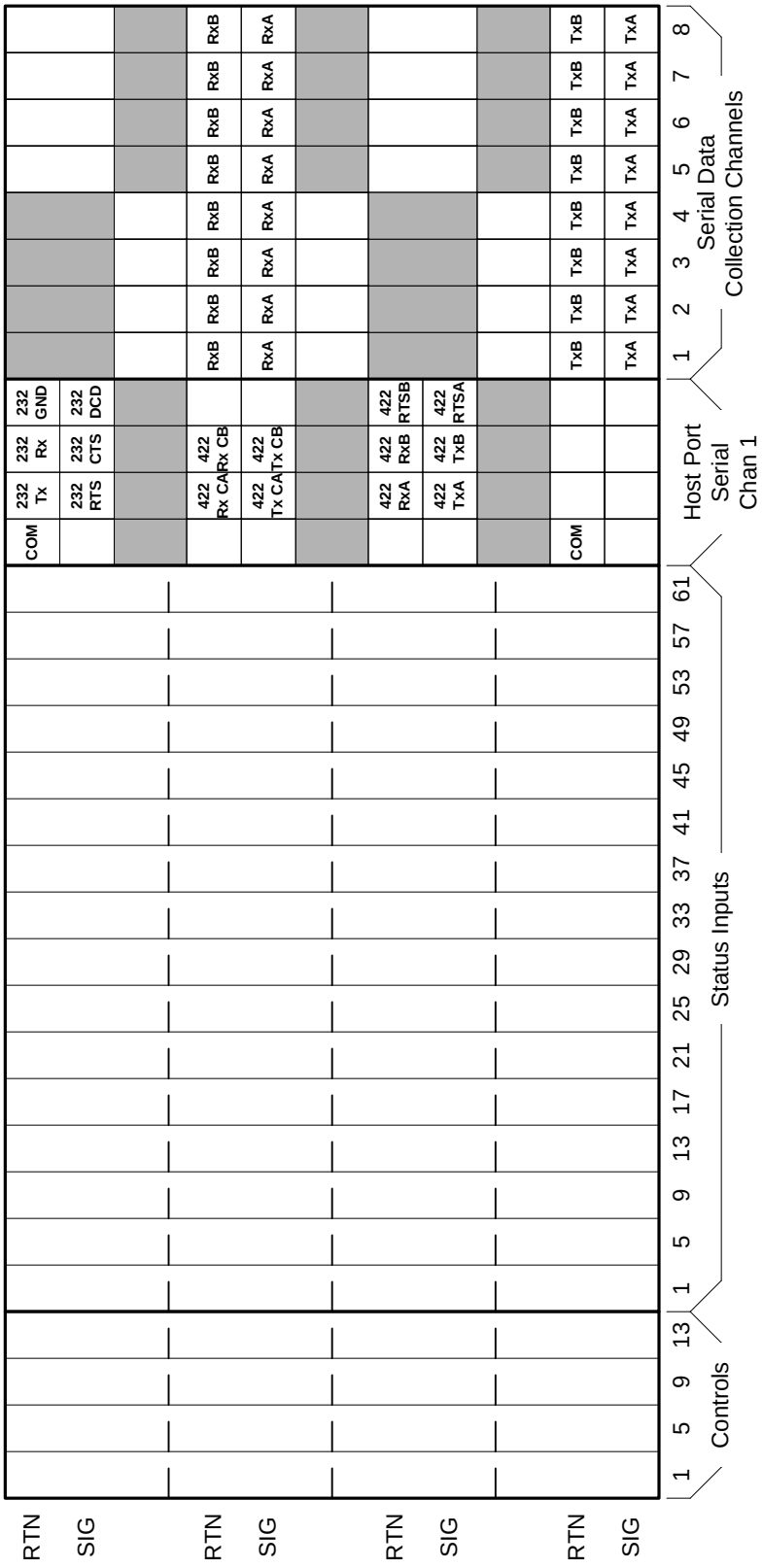

Figure 3-30 Telzon Termination Block Wire-Wrap Designations

Figure 3-31 Telzon Pinouts and Functions

The four optional collection ports (Channels 6 – 9, which are TBOS only) must connect using the RS422/RS-485 interface.

3.4.4.7.6 Front-Access Wire-Wrap Kit

The front-access wire-wrap kit is intended for any WS2000 application requiring front access to the unit. The wire-wrap panel uses one rack space in addition to the WS2000 main unit, as shown in Figure 3-32. This kit is ideal for Controlled Environment Vault (CEV) or installations with restricted rear access. The kit has a heavy-duty, clear-plastic cover (not shown) to prevent accidental contact with the wire-wrap pins.

Figure 3-32 Front-Access Wire-Wrap Kit (Cover Removed)

The front-access wire-wrap kit consists of the parts shown in Table 3-24.

Table 3-24 Front-Access Wire-Wrap Kit (PN 533-T032) Components

Part Number	Qty	Description
510-T001	1	Wire-Wrap Panel
977-T046	1	TB1 Cable (A)
977-T047	1	Serial Cable (B)
977-T048	2	Discrete Cables (C and D)
953-1001	2	23-inch Rack Adapters
900-0008	4	Rack Adapter Screws

The cables provided in this kit connect directly to the WS2000 as shown in Figure 3-33. Table 3-25 through Table 3-28 describe the front wire-wrap connections.

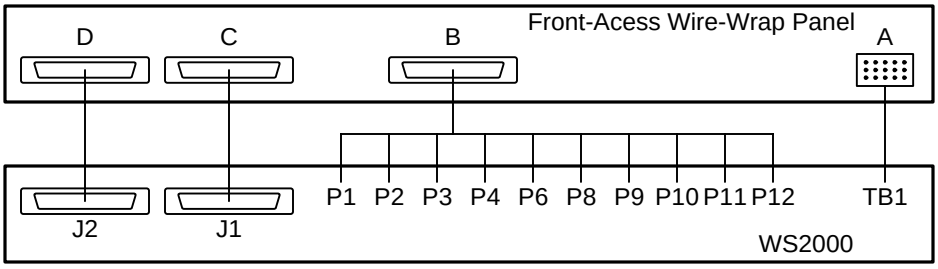

Figure 3-33 Front-Access Wire-Wrap Panel Connections

Table 3-25 Power/Auxiliary Host Port Connections Between WS2000 and Front-Access Wire-Wrap Panel Connector A

From Wire-Wrap Connector A Pin No.	To WS2000 TB1 Pin No.	Wire Color	Function
1	TB1-3	Red	(+) Battery Ground
2	TB1-1	Black	(–) Battery Input
3	TB1-13	Green	Frame Ground
A1	TB1-10	Orange	Internal 202T Modem Tx Tip
A2	TB1-8	White	Internal 202T Modem Tx Ring
A3	TB1-2	White/Black	MPU Run Relay NO
A4	TB1-4	Red/Black	MPU Run Relay Common
A5	TB1-6	Green/Black	MPU Run Relay NC
A6	No Connection		
D1	TB1-14	Blue/White	Internal 202T Modem Rx Tip
D2	TB1-12	Blue	Internal 202T Modem Rx Ring
D3	TB1-5	Black/White	COS Run Relay NO
D4	TB1-7	Red/White	COS Run Relay Common
D5	TB1-9	Green/White	COS Run Relay NC
D6	TB1-11	Blue/Black	External COS Reset

Table 3-26 Serial Port Connections for Front Wire-Wrap Panel Connector B

Pin.	Function	Pin.	Function	Pin.	Function	Pin.	Function
A7	Ch 2 Tx– (RS-422)	B7	Ch 2 Tx+ (RS-422)	C7	Ch 6 Tx– (RS-422)	D7	Ch 6 Tx+ (RS-422)
A8	Ch 2 Rx– (RS-422)	B8	Ch 2 Rx+ (RS-422)	C8	Ch 6 Rx– (RS-422)	D8	Ch 6 Rx+ (RS-422)
A9	Ch 2 Shld Gnd	B9	Ch 3 Shld Gnd	C9	Ch 7 Shld Gnd	D9	Ch 6 Shld Gnd
A10	Ch 3 Tx– (RS-422)	B10	Ch 3 Tx+ (RS-422)	C10	Ch 7 Tx– (RS-422)	D10	Ch 7 Tx+ (RS-422)
A11	Ch 3 Rx– (RS-422)	B11	Ch 3 Rx+ (RS-422)	C11	Ch 7 Rx– (RS-422)	D11	Ch 7 Rx+ (RS-422)
A12	Ch 4 Tx– (RS-422)	B12	Ch 4 Tx+ (RS-422)	C12	Ch 8 Tx– (RS-422)	D12	Ch 8 Tx+ (RS-422)
A13	Ch 4 Rx– (RS-422)	B13	Ch 4 Rx+ (RS-422)	C13	Ch 8 Rx– (RS-422)	D13	Ch 8 Rx+ (RS-422)
A14	Ch 4 Shld Gnd	B14	Ch 5 Shld Gnd	C14	Ch 9 Shld Gnd	D14	Ch 8 Shld Gnd
A15	Ch 5 Tx– (RS-422)	B15	Ch 5 Tx+ (RS-422)	C15	Ch 9 Tx– (RS-422)	D15	Ch 9 Tx+ (RS-422)
A16	Ch 5 Rx– (RS-422)	B16	Ch 5 Rx+ (RS-422)	C16	Ch 9 Rx– (RS-422)	D16	Ch 9 Rx+ (RS-422)
A17	Ch 1 Tx– (RS-422)	B17	Ch 1 Tx+ (RS-422)	C17	Ch 1 Tx (RS-232)	D17	Ch 1 RTS (RS-232)
A18	Ch 1 Rx– (RS-422)	B18	Ch 1 Rx+ (RS-422)	C18	Ch 1 CTS (RS-232)	D18	Ch 1 Sig Gnd (RS-232)
A19	Ch 1 Shld Gnd	B19	No Connection	C19	Ch 1 Rx (RS-232)	D19	Ch 1 DCD (RS-232)

Table 3-27 J1 Discrete Input/Output Connections from Front Wire-Wrap Panel Connector C

Pin	Function	Pin	Function	Pin	Function	Pin	Function
A20	Control Output 1	B20	Control Output 1 Return	C20	Control Output 2	D20	Control Output 2 Return
A21	Control Output 3	B21	Control Output 3 Return	C21	Control Output 4	D21	Control Output 4 Return
A22	Control Output 5	B22	Control Output 5 Return	C22	Control Output 6	D22	Control Output 6 Return
A23	Control Output 7	B23	Control Output 7 Return	C23	Control Output 8	D23	Control Output 8 Return
A24	Status/Alarm Input 1	B24	Status/Alarm Input 1 Return	C24	Status/Alarm Input 2	D24	Status/Alarm Input 2 Return
A25	Status/Alarm Input 3	B25	Status/Alarm Input 3 Return	C25	Status/Alar m Input 4	D25	Status/Alarm Input 4 return
A26	Status/Alarm Input 5	B26	Status/Alarm Input 5 Return	C26	Status/Alarm Input 6	D26	Status/Alarm Input 6 Return
A27	Status/Alarm Input 7	B27	Status/Alarm Input 7 Return	C27	Status/Alarm Input 8	D27	Status/Alarm Input 8 Return
A28	Status/Alarm Input 9	B28	Status/Alarm Input 9 Return	C28	Status/Alarm Input 10	D28	Status/Alarm Input 10 Return
A29	Status/Alarm Input 11	B29	Status/Alarm Input 11 Return	C29	Status/Alarm Input 12	D29	Status/Alarm Input 12 Return
A30	Status/Alarm Input 13	B30	Status/Alarm Input 13 Return	C30	Status/Alarm Input 14	D30	Status/Alarm Input 14 Return
A31	Status/Alarm Input 15	B31	Status/Alarm Input 15 Return	C31	Status/Alarm Input 16	D31	Status/Alarm Input 16 Return
A32	Status/Alarm Input 17	B32	Status/Alarm Input 17 Return	C32	Status/Alarm Input 18	D32	Status/Alarm Input 18 Return
A33	Status/Alarm Input 19	B33	Status/Alarm Input 19 Return	C33	Status/Alarm Input 20	D33	Status/Alarm Input 20 Return
A34	Status/Alarm Input 21	B34	Status/Alarm Input 21 Return	C34	Status/Alarm Input 22	D34	Status/Alarm Input 22 Return
A35	Status/Alarm Input 23	B35	Status/Alarm Input 23 Return	C35	Status/Alarm Input 24	D35	Status/Alarm Input 24 Return
A36	Status/Alarm Input 25	B36	Status/Alarm Input 25 Return	C36	Status/Alarm Input 26	D36	Status/Alarm Input 26 Return
A37	Status/Alarm Input 27	B37	Status/Alarm Input 27 Return	C37	Status/Alarm Input 28	D37	Status/Alarm Input 28 Return
A38	Status/Alarm Input 29	B38	Status/Alarm Input 29 Return	C38	Status/Alarm Input 30	D38	Status/Alarm Input 30 Return
A39	Status/Alarm Input 31	B39	Status/Alarm Input 31 Return	C39	Status/Alarm Input 32	D39	Status/Alarm Input 32 Return

Table 3-28 J2 Discrete Input/Output Connections from Front Wire-Wrap Panel Connector D

Pin	Function	Pin	Function	Pin	Function	Pin	Function
A40	Control Output 9 or Analog 1+	B40	Cntrl Out 9 Rtrn or Analog 1–	C40	Control Output 10 or Analog 2+	D40	Cntrl Out 10 Rtrn or Analog 2–
A41	Control Output 11 or Analog 3+	B41	Cntrl Out 11 Rtrn or Analog 3–	C41	Control Output 12 or Analog 4+	D41	Cntrl Out 12 Rtrn or Analog 4–
A42	Control Output 13 or Analog 5+	B42	Cntrl Out 13 Rtrn or Analog 5–	C42	Control Output 14 or Analog 6+	D42	Cntrl Out 14 Rtrn or Analog 6–
A43	Control Output 15 or Analog 7+	B43	Cntrl Out 15 Rtrn or Analog 7–	C43	Control Output 16 or Analog 8+	D43	Cntrl Out 16 Rtrn or Analog 8–
A44	Status/Alarm Input 33	B44	Status/Alarm Input 33 Rtrn	C44	Status/Alarm Input 34	D44	Status/Alarm Input 34 Rtrn
A45	Status/Alarm Input 35	B45	Status/Alarm Input 35 Rtrn	C45	Status/Alarm Input 36	D45	Status/Alarm Input 36 Rtrn
A46	Status/Alarm Input 37	B46	Status/Alarm Input 37 Rtrn	C46	Status/Alarm Input 38	D46	Status/Alarm Input 38 Rtrn
A47	Status/Alarm Input 39	B47	Status/Alarm Input 39 Rtrn	C47	Status/Alarm Input 40	D47	Status/Alarm Input 40 Rtrn
A48	Status/Alarm Input 41	B48	Status/Alarm Input 41 Rtrn	C48	Status/Alarm Input 42	D48	Status/Alarm Input 42 Rtrn
A49	Status/Alarm Input 43	B49	Status/Alarm Input 43 Rtrn	C49	Status/Alarm Input 44	D49	Status/Alarm Input 44 Rtrn
A50	Status/Alarm Input 45	B50	Status/Alarm Input 45 Rtrn	C50	Status/Alarm Input 46	D50	Status/Alarm Input 46 Rtrn
A51	Status/Alarm Input 47	B51	Status/Alarm Input 47 Rtrn	C51	Status/Alarm Input 48	D51	Status/Alarm Input 48 Rtrn
A52	Status/Alarm Input 49	B52	Status/Alarm I Inputn 49 Rtrn	C52	Status/Alarm Input 50	D52	Status/Alarm Input 50 Rtrn
A53	Status/Alarm Input 51	B53	Status/Alarm Input 51 Rtrn	C53	Status/Alarm Input 52	D53	Status/Alarm Input 52 Rtrn
A54	Status/Alarm Input 53	B54	Status/Alarm Input 53 Rtrn	C54	Status/Alarm Input 54	D54	Status/Alarm Input 54 Rtrn
A55	Status/Alarm Input 55	B55	Status/Alarm Input 55 Rtrn	C55	Status/Alarm Input 56	D55	Status/Alarm Input 56 Rtrn
A56	Status/Alarm Input 57	B56	Status/Alarm Input 57 Rtrn	C56	Status/Alarm Input 58	D56	Status/Alarm Input 58 Rtrn
A57	Status/Alarm Input 59	B57	Status/Alarm Input 59 Rtrn	C57	Status/Alarm Input 60	D57	Status/Alarm Input 60 Rtrn
A58	Status/Alarm Input 61	B58	Status/Alarm Input 61 Rtrn	C58	Status/Alarm Input 62	D58	Status/Alarm Input 62 Rtrn
A59	Status/Alarm Input 63	B59	Status/Alarm Input 63 Rtrn	C59	Status/Alarm Input 64	D59	Status/Alarm Input 64 Rtrn

3.4.4.7.7 Rear-Access Wire-Wrap Kit

The rear-access wire-wrap kit (Figure 3-34) is ideal for any WS2000 application where rear access to the unit is available. The wire-wrap kit consists of connectors that snap onto the connectors on the rear of the WS2000.

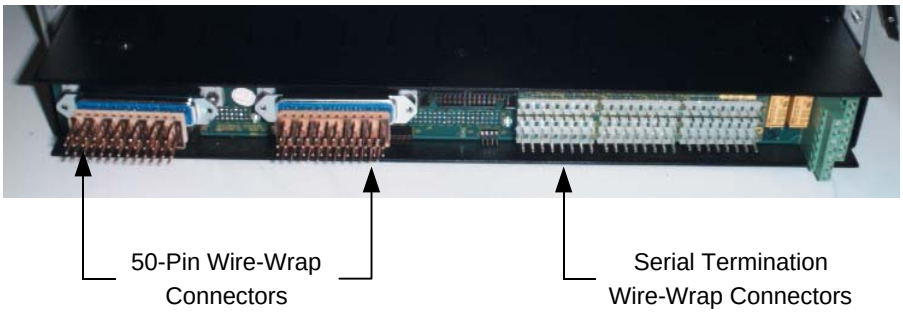

Figure 3-34 WS2000 with Rear-Access Wire-Wrap kit

The wire-wrap kit preserves the one rack-space footprint of the WS2000 unit, making this kit ideal for Customer Premises Equipment (CPE) or cabinet installations. The J1 and J2 wire-wrap connectors provide alarm input pins and a single ground return pin. Control pins are available for Form A or Form C contacts. The serial port pins provide all serial input/output signals on the WS2000. The rear-access wire-wrap kit consists of the components listed in Table 3-29.

Table 3-29 Rear-Access Wire-Wrap Kit (PN 585-T034) Components

Part Number	Quantity	Description
620-T030	2	50-Pin Wire-Wrap Connectors (for J1/J2)
517-T003	1	Serial Termination Wire-Wrap Connector

Figure 3-35 and Figure 3-36 and Table 3-30 through Table 3-32 list the pinouts for the various rear-access wire-wrap connectors.

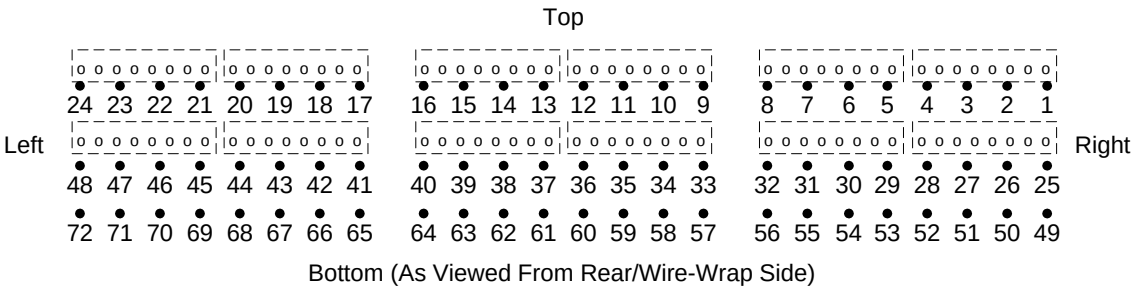

Figure 3-35 Rear-Access Serial termination Wire-Wrap Connector Pinouts

Table 3-30 Serial Port Connections for the Rear-Access Wire-Wrap Assembly

Pin	Function	Pin	Function	Pin	Function
1	Ch4 RS-422 Tx +	25	Ch7 RS-422 Tx +	49	Ch6 RS-422 Tx +
2	Ch4 RS-422 Tx –	26	Ch7 RS-422 Tx –	50	Ch6 RS-422 Tx –
3	Ch4 RS-422 Rx +	27	Ch7 RS-422 Rx +	51	Ch6 RS-422 Rx +
4	Ch4 RS-422 Rx –/RS-232 Rx	28	Ch7 RS-422 Rx –	52	Ch6 RS-422 Rx –
5	Ch4 Ground	29	Ch9 RS-422 Tx +	53	Ch8 RS-422 Tx +
6	Ch4 RS-232 CTS	30	Ch9 RS-422 Tx –	54	Ch8 RS-422 Tx –
7	Ch4 RS-232 RTS	31	Ch9 RS-422 Rx +	55	Ch8 RS-422 Rx +
8	Ch4 RS-232 Tx	32	Ch9 RS-422 Rx –	56	Ch8 RS-422 Rx –
9	Ch2 RS-422 Tx +	33	Ch3 RS-422 Tx +	57	Ch5 RS-422 Tx +
10	Ch2 RS-422 Tx –	34	Ch3 RS-422 Tx –	58	Ch5 RS-422 Tx –
11	Ch2 RS-422 Rx +	35	Ch3 RS-422 Rx +	59	Ch5 RS-422 Rx +
12	Ch2 RS-422 Rx –/RS-232 Rx	36	Ch3 RS-422 Rx –/RS-232 Rx	60	Ch5 RS-422 Rx –/RS-232 Rx
13	Ch2 Ground	37	Ch3 Ground	61	Ch5 Ground
14	Ch2 RS-232 CTS	38	Ch3 RS-232 CTS	62	Ch5 RS-232 CTS
15	Ch2 RS-232 RTS	39	Ch3 RS-232 RTS	63	Ch5 RS-232 RTS
16	Ch2 RS-232 Tx	40	Ch3 RS-232 Tx	64	Ch5 RS-232 Tx
17	Craft RS-232 DCD	41	Ch1 RS-422 Tx Clock +	65	Ch1 RS-422 Tx Clock –
18	Craft +12 Vdc	42	Ch1 RS-422 Rx Clock +	66	Ch1 RS-422 Rx Clock –
19	Craft +5 Vdc	43	Ch1 RS-422 Tx +	67	Ch1 RS-232 DCD
20	Craft –12 Vdc	44	Ch1 RS-422 Tx –	68	Ch1 RS-422 Rx –/RS-232 Rx
21	Craft Ground	45	Ch1 RS-422 Rx +	69	Ch1 Ground
22	Craft RS-232 RTS	46	Ch1 RS-422 Rx –	70	Ch1 RS-232 CTS
23	Craft RS-232 Rx	47	Ch1 RS-422 RTS +	71	Ch1 RS-232 RTS
24	Craft RS-232 Tx	48	Ch1 RS-422 RTS –	72	Ch1 RS-232 Tx

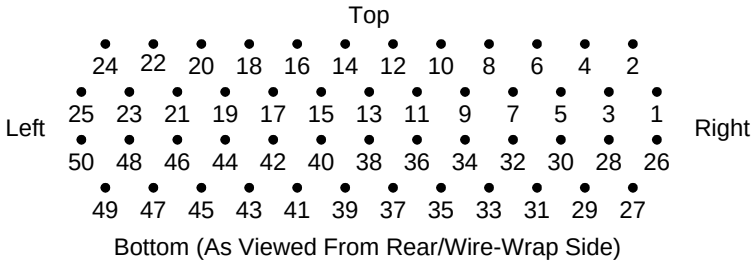

Figure 3-36 Rear-Access 50-Pin Wire-Wrap Connector on J1/J2

Table 3-31 J1 Discrete I/O Connections for the Rear-Access Wire-Wrap Assembly

Function	Pin		Function
Control Relay 1 Form C – NC	1	26	Control Relay 1 Form A or C – NO
Control Relay 2 Form C – NC	2	27	Control Relay 2 Form A or C – NO
Control Relay 3 Form C – NC	3	28	Control Relay 3 Form A or C – NO
Control Relay 4 Form C – NC	4	29	Control Relay 4 Form A or C – NO
Control Relay 5 Form C – NC	5	30	Control Relay 5 Form A or C – NO
Control Relay 6 Form C – NC	6	31	Control Relay 6 Form A or C – NO
Control Relay 7 Form C – NC	7	32	Control Relay 7 Form A or C – NO
Control Relay 8 Form C – NC	8	33	Control Relay 8 Form A or C – NO
Ground	9	34	Control Relay Common Voltage
Status/Alarm Input 1	10	35	Status/Alarm Input 2
Status/Alarm Input 3	11	36	Status/Alarm Input 4
Status/Alarm Input 5	12	37	Status/Alarm Input 6
Status/Alarm Input 7	13	38	Status/Alarm Input 8
Status/Alarm Input 9	14	39	Status/Alarm Input 10
Status/Alarm Input 11	15	40	Status/Alarm Input 12
Status/Alarm Input 13	16	41	Status/Alarm Input 14
Status/Alarm Input 15	17	42	Status/Alarm Input 16
Status/Alarm Input 17	18	43	Status/Alarm Input 18
Status/Alarm Input 19	19	44	Status/Alarm Input 20
Status/Alarm Input 21	20	45	Status/Alarm Input 22
Status/Alarm Input 23	21	46	Status/Alarm Input 24
Status/Alarm Input 25	22	47	Status/Alarm Input 26
Status/Alarm Input 27	23	48	Status/Alarm Input 28
Status/Alarm Input 29	24	49	Status/Alarm Input 30
Status/Alarm Input 31	25	50	Status/Alarm Input 32

Table 3-32 J2 Discrete I/O Connections for the Rear-Access Wire-Wrap Assembly

Function	Pin		Function
Control Output 9, Form C – NC or Analog 1+	1	26	Control Output 9, Form A or C – NO or Analog 1–
Control Output 10, Form C – NC or Analog 2+	2	27	Control Output 10, Form A or C – NO or Analog 2–
Control Output 11, Form C – NC or Analog 3+	3	28	Control Output 11, Form A or C – NO or Analog 3–
Control Output 12, Form C – NC or Analog 4+	4	29	Control Output 12, Form A or C – NO or Analog 4–
Control Output 13, Form C – NC or Analog 5+	5	30	Control Output 13, Form A or C – NO or Analog 5–
Control Output 14, Form C – NC or Analog 6+	6	31	Control Output 14, Form A or C – NO or Analog 6–
Control Output 15, Form C – NC or Analog 7+	7	32	Control Output 15, Form A or C – NO or Analog 7–
Control Output 16, Form C – NC or Analog 8+	8	33	Control Output 16, Form A or C – NO or Analog 8–
Ground	9	34	Control Relay Common Voltage
Status/Alarm Input 33	10	35	Status/Alarm Input 34
Status/Alarm Input 35	11	36	Status/Alarm Input 36
Status/Alarm Input 37	12	37	Status/Alarm Input 38
Status/Alarm Input 39	13	38	Status/Alarm Input 40
Status/Alarm Input 41	14	39	Status/Alarm Input 42
Status/Alarm Input 43	15	40	Status/Alarm Input 44
Status/Alarm Input 45	16	41	Status/Alarm Input 46
Status/Alarm Input 47	17	42	Status/Alarm Input 48
Status/Alarm Input 49	18	43	Status/Alarm Input 50
Status/Alarm Input 51	19	44	Status/Alarm Input 52
Status/Alarm Input 53	20	45	Status/Alarm Input 54
Status/Alarm Input 55	21	46	Status/Alarm Input 56
Status/Alarm Input 57	22	47	Status/Alarm Input 58
Status/Alarm Input 59	23	48	Status/Alarm Input 60
Status/Alarm Input 61	24	49	Status/Alarm Input 62
Status/Alarm Input 63	25	50	Status/Alarm Input 64

3.4.5 Powering the WS2000

The procedure to apply power to the WS2000 can vary, depending on the equipment installed. The following describes how to apply power to a WS2000 equipped with/without discrete expanders.

Using #14 – #24 AWG power wire, connect input power to WS2000 TB1 through a fused source. Table 3-33 provides fuse requirements. The input voltage ranges from –20 Vdc to –60 Vdc. Verify that the plug-in board assembly is installed and that the power input leads are terminated before inserting the fuse.

Table 3-33 WS2000 Fusing Requirements

No of Discrete Expanders	–48 Vdc		–24 Vdc	
	GMT	Type 70	GMT	Type 70
0	0.75 A	0.75 A	1.3 A	1.3
1	1.3 A	1.3 A	2.0 A	2.0 A
2	2.0 A	2.0 A	2.5 A	2.0 A
3	2.5 A	2.0 A	3.0 A	3.0 A
4	3.0 A	3.0 A	3.5 A	5.0 A
5	3.5 A	5.0 A	4.0 A	5.0 A
6	4.0 A	5.0 A	5.0 A	5.0 A
7	5.0 A	5.0 A	5.0 A	5.0 A

Each WS2000 unit pulls a maximum load of 24 Watts, assuming all discrete inputs are active and the WS2000 application includes a rack-mount modem.

Auto-Parity on Powerup

When WS2000 powers up, the TABS software self-configures the host port (Channel 1) parity by detecting framing or parity errors during normal polling and making adjustments from odd to even to no parity based on the number of errors detected. WS2000 default parity is odd, which is the standard for TABS communication, although some older TABS units use even or no parity. This auto-parity feature, which enables WS2000 TABS software to configure the host port parity without the Wesmaint interface, operates in the following manner:

- If it detects less than three framing or parity errors after the first three polls, WS2000 software sets odd parity and initializes. But if, instead, it detects three or more framing or parity errors, the software assumes even or no parity.

- If it detects less than three framing or parity errors after the second three polls, the software assumes even parity and initializes. however, if it detects three or more framing or parity errors, the software sets parity to None, quits checking for parity, and resets all error counters to 0.

You can check the parity using the Wesmaint COM STATUS function. After parity is set, you can change it only by recycling power or changing the Wesmaint mode from Normal to Config.

3.4.5.1 Without Discrete Expanders

1. Install the appropriate fuse at the power distribution panel to power the WS2000 up. The front-panel MPU RUN LED lights and remains lit.
2. Connect a PC or portable Wesmaint unit to the DB25 connector (JB3) on the WS2000 front panel or connect a rack-mount Wesmaint unit to P5 on the WS2000 rear panel.

   Important: When Wesmaint connects to P5 on the rear of the WS2000, you must insert a jumper plug in the front-panel DB25 connector for configuration changes to take effect. (Refer to **Cabling**on Page 5-1.) ***Disconnect the jumper plug before powering down the WS2000.*** You do not need the jumper plug if you are viewing the unit configuration or running diagnostic menus. *You can power the unit down with the rack-mount Wesmaint unit connected.*

   Caution: Do not power down the WS2000 without first disconnecting the PC or portable Wesmaint unit connected to the front DB25 connector.
3. If no display is present, press **DSPY**.

   If the message **UPGRADE DATABASE** appears, the current database was created using a different software version that is not compatible with the currently installed software. In this event, enter the Config Mode and use Procedure 5-22 to initialize the database or download a database that is compatible with the current software version.

   Westronic can provide a “Database Conversion Utility” that makes newer software compatible with older databases. Contact Westronic Customer Service for assistance.
4. WS2000 has no password control at initial installation and turnup time. Refer to Procedure 5-22 if the installed unit requires a password.

3.4.5.2 With Discrete Expanders

WS2000 Turnup

1. **A.** When the discrete **expander** units have separate fusing from the WS2000, remove the WPIB cable connector (P7) from the WS2000 backplane. The discrete expander plug-ins do not require removal from the shelf backplane.

   B. When WS2000 and any connected discrete expander units share the same fuse:

   - Remove the WPIB cable connector (P7) from the WS2000 backplane
   - Pull all discrete expander plug-ins out about 1 inch from the shelf backplane

2. Install the appropriate fuse at the power distribution panel to power up the WS2000. The front panel MPU RUN LED lights and remains lit.

Discrete Expander Turnup

1. Power the WS2000 down and reconnect the WPIB cable to the P7 connector on the WS2000.
2. Verify each discrete expander unit address (each discrete expander has a unique address).
3. Install the discrete expander plug-ins into their shelves.
4. Physically inspect the WPIB cable assembly to verify that the P7 connections on all interconnected shelves are seated correctly over the proper pins.
5. Perform the powerup procedure discussed in *Without Discrete Expanders* on Page 3-53.
6. Verify that the discrete expander units are communicating properly with the WS2000 by connecting the Wesmaint to the WS2000 and perform the following steps:
   - Configure the WS2000 (refer to **WS2000 Step-by-Step Configuration** on Page 4-17.)
   - Configure the discrete points of each discrete expander to a chosen host output display number. See **Configuring Output Displays** on Page 4-23 to make display assignments for the discrete expanders.
   - Put the WS2000 unit in Normal Mode. See **Wesmaint Mode** on Page 5-22.
   - Activate several latching controls on each discrete expander (**Latching Control** on Page 5-14). Exercising several control

points on each discrete expander verifies proper communication between the WS2000 and the discrete expander units.

You should hear an audible relay closure within the unit.

If the unit status loopback straps (Z7 and Z9) are inserted on the backplane, the control point LED should turn on or off in conjunction with the relay closure.

3.5 Installation Check List

Use the following check list when installing the WS2000 hardware:

A. Mount the unit.

B. Verify strap options for the following boards:
- Main (Figures 3-3 – 3-6; Tables 3-1 – 3-4)
- Modem (Figure 3-7; Tables 3-5 – 3-7)
- Analog (Figure 3-8; Table 3-8)
- Pulse accumulator (Figure 3-10)

C. Verify backplane strap options (Figure 3-11) for the following:
- Serial RS-422 receive side terminations (Z1 – Z3, Table 3-10)
- Control output configuration (Z6 and Z8, Figure 3-13)
- WPIB addresses (Z5, Table 3-9)

D. Cable the unit
- Verify serial port connections (DTE/DCE or DTE/DTE):
  - Figures 3-14, 3-16, and 3-18, Table 3-11
  - Figures 3-29 and 3-31, Table 3-23 (Telzon panel)
  - Figure 3-33, Table 3-26 (front-access panel)
  - Figure 3-35, Table 3-30 (rear-access panel)
- Verify discrete connections:
  - Figure 3-19, Tables 3-12 and 3-13
  - Figures 3-29 and 3-31 (Telzon)
  - Figure 3-33, Tables 3-27 and 3-28 (front-access panel)
  - Figure 3-36, Tables 3-31 and 3-32 (rear-access panel)
- Verify analog connections (Tables 3-13, 3-28, and 3-32)
- Verify power connections (Figure 3-21, Table 3-25)

The unit is now ready for software configuration. See Section 4 for configuration information and Section for Wesmaint reference material.

This page intentionally left blank.

4 Software Configuration

4.1 Introduction

Section 3 described the WS2000 hardware configuration. This section, which describes software configuration, consists of three primary parts:

- An overview of configuration and the configuration process
- A methodology for organizing configuration parameters
- A detailed set of instructions for configuring a WS2000

4.2 Configuration Overview

This overview briefly describes the elements that make up an operations system and introduces various monitoring concepts. An understanding of these elements and concepts is helpful when configuring the WS2000.

A monitoring system is a hierarchical organization of units designed to report and control digital transmission equipment. A centralized Operations System (OS) or control center occupies the top of the hierarchy. The OS collects data from Remote Telemetry Units (RTUs) on a polled basis.

The RTUs form the second level of the hierarchy. The WS2000 is an RTU that processes information from monitored equipment and discrete inputs on a polled basis. The monitored equipment and discrete inputs are at the base of the hierarchy.

4.2.1 Scan Points

The basic unit of information that WS2000 processes is a binary signal called a scan point. The monitored equipment provides a scan point to indicate some aspect of its condition. The manufacturer of the monitored equipment defines the scan points, which are active high or low. The invert attribute allows inversion of the scan point status before processing. Thus, an RTU can process the status regardless of the electronic output of the monitored equipment.

4.2.2 Process Lists

WS2000 processes the scan point data according to various attributes defined in a process list before reporting it to the OS. A process list is a set of attribute definitions for each of the 64 scan points in a display.

Each display that WS2000 processes must have an associated process list.

The WS2000 comes from the factory with a default configuration, such as that shown in Appendix A. The default WS2000 configuration database supplies several predefined process lists. You can customize, delete, or copy any of the predefined process lists. You can also create a new process list from scratch or generate a new list by copying and modifying an existing process list.

4.2.2.1 Alarm/Status Points

The process list classifies a scan point as an alarm point or a status point. Scan points with an alarm point classification indicate a Change of State (COS) when the scan point status changes from a low to a high state. Alarm points also result in local WS2000 alarm annunciation through the change-of-state LED (**COS**).

Alarm points can also have a classification as bipolar alarms: they provide COS indications when scan point status changes in either direction, such as from high to low or from low to high.

Status points, on the other hand, are information only and never indicate a change of state.

4.2.2.2 Status Inversion

Scan points can be active when they are high or low. The invert attribute allows scan point status to be inverted before processing. That is, when the scan point status is low, it processes as though it were high and, likewise, it processes as though low when it is high.

4.2.2.3 Memory Attributes

A process list can define a memory attribute for each scan point. If a scan point has memory (sometimes referred to as stretch), WS2000 holds any changes in scan point status until they are reported to the OS.

4.2.3 Control Points

The monitored equipment provides control points to affect some operational aspect. Such typical uses of control points are to silence alarm indications or to restart microprocessor-based equipment. As in the case of scan points, the manufacturer of the monitored equipment also defines the actual meanings of control points.

Some control points are bipolar and require a latching command (On or Off) while other control points require only a momentary command (pulse).

Each WS2000 provides a maximum of one display (64 points) of discrete input data. The first 16 points of each discrete display can operate as latching or momentary control points.

4.2.4 Serial Interfaces

Communications among the monitored equipment, the WS2000, and the operations center occur over a serial interface. A serial interface is a physical connection that transports information. The rules that govern information transport are called a protocol.

Each serial interface communicates at a configurable speed of 1,200 or 2,400 bps. Communications between WS2000 and the monitored equipment usually use TABS protocol and the RS-422 physical layer interface with a channel speed of 2,400 bps.

Each WS2000 is equipped with 10 serial channels, four of which are optional. Channel 1 is a TABS channel reporting to the host. Channels 2 through 5 are TBOS or TABS data collection ports while Channels 6 through 9 (optional) are TBOS only. Channel 0/10, the Craft maintenance port, interfaces with the Wesmaint/PC-Wesmaint for configuration and local monitoring of the WS2000. Configuration parameters for Channel 0/10 are fixed and cannot be altered.

Section 5 describes Wesmaint functions in detail. Also see Section 2 for specific information on channel interface parameters.

4.2.4.1 Physical Connections

The WS2000 supports three types of physical connections for serial interfaces: RS-232/RS-422 (point-to-point interfaces) and RS-485 (multi-point interfaces). Serial Channels 1 through 5 support all three types of physical level interfaces. Channels 6 through 9 support RS-422 only. Channel 0/10 is RS-232 only.

Refer to Section 2 for more information on the interface characteristics of each channel.

4.2.4.2 Handshaking

WS2000 serial Channels 1 through 5 provide the Request to Send (RTS) handshaking signal when operating in RS-232 mode. When Channels 2 through 5 operate in RS-232 mode, RTS is asserted 10 – 20 milliseconds before data transmission begins and is deasserted after data transmission ends.

Serial Channel 1 also provides an RS-422 RTS signal. When operating in RS-422 mode, the RTS signal is asserted on powerup and remains asserted. Although some channels provide the Clear to Send (CTS) and

Data Carrier Detect (DCD) handshake signals, WS2000 does not use these signals.

Refer to Section 2 for detailed information on the interface parameters of each channel.

4.2.4.3 Serial Communications

TBOS Protocol Organization

Telemetry Byte Oriented Serial (TBOS) protocol is a master/slave protocol. WS2000 serves as master while the monitored equipment serves as a slave. When communicating with Network Elements (NEs), the WS2000 is the host and the NE is the slave. Under TBOS protocol rules, the master issues a poll or command character to the slave and waits a maximum of 200 milliseconds for the slave (NE) to respond.

Displays

WS2000 scans the monitored equipment for scan point data and commands the monitored equipment to operate control points. The fundamental unit of information in the TBOS protocol is the display, which is a set of 64 scan points and 64 control points. Each set of scan points has a corresponding set of defined control points.

Monitored equipment contain one or more displays, depending on the number of defined scan points and control points. TBOS protocol supports a maximum of eight displays (512 points) for each serial port.

Characters

Display organization consists of characters – sets of eight scan points each. Because a display contains 64 scan points, each display contains eight characters. The character is the smallest unit of information transferred by TBOS protocol.

Scan List

WS2000 uses a scan list to control display character polling. When all scan points in a display are active, the scan list polls all eight characters. If one or more display characters are not active, the scan list can be set to never poll inactive characters. In polling only the active display characters, WS2000 processes a display more efficiently.

A scan list can be set to disable processing on scan characters for newly installed, but untested, equipment.

Note: To insure proper operation, TBOS protocol requires polling on at least two characters of a given TBOS serial channel.

TBOS Commands and Responses

A master sends two TBOS message types: scan requests and command requests. A TBOS scan request identifies the display and character for which the master is polling and the slave returns the requested character. A TBOS command request identifies the display and control point that the master wants to control and specifies the type of control (latch, unlatch, or momentary).

TABS Protocol Organization

Telemetry Asynchronous Block Serial (TABS) is a master/slave protocol. WS2000 serves as master while the monitored equipment serves as a slave. Under TABS protocol rules, the master issues a poll or command message to the monitored equipment and waits a maximum of 500 milliseconds for the monitored equipment to begin a response message. TABS messages can be a maximum of 261 bytes in length.

MEFA

TABS provides address capability of 32 addresses (0 – 31). TABS addressing, also known as Monitored Equipment Frame Address (MEFA), allows a maximum of 32 TABS slaves to connect to a single serial channel connected to a single master. The master uses the TABS message address field to identify which slave is to accept and respond to each TABS command. Only the slave that is addressed in the command transmits a corresponding response message. TABS protocol provides a number of message sets for monitoring/controlling various forms of data. WS2000 also has extended TABS address capability (0 – 255) in interaction with the OS or host upstream. See *Extended TABS Address Frame Format* on Page 4-6.

Displays

The WS2000 scans the monitored equipment for scan point data and commands the monitored equipment to operate control points. The fundamental unit of information in TABS protocol is the display, which is a set of 64 scan points and 64 control points. Each point can report status and address a control. A display is the smallest unit of information transferred by the Alarm Surveillance and Control message set.

MEDN

The TABS input display is known as Monitored Equipment Display Number (MEDN). Monitored equipment contain one or more displays, depending on the number of defined scan points and control points. TABS protocol supports a maximum of 65,536 displays for each TABS address. However, the WS2000 supports up to 100 status/alarm/control displays consisting of TABS, TBOS, and discrete Inputs/Outputs (I/Os).

Characters

Display organization consists of characters – sets of eight scan points each. Because a display contains 64 scan points, each display contains eight characters.

Scan List

WS2000 uses a scan list to control display character reporting. When all scan points in a display are active, the scan list reports all eight characters. If one or more display characters are not active, the scan list can be set to report inactive characters as all zeroes to the operations center.

In TABS protocol, as opposed to TBOS protocol, a disabled character still reports, but the scan points within that character are set to zero. Disabling characters prevents reporting unwanted alarm data, but does not improve port efficiency for displays collected using TABS ports.

TABS Alarm Surveillance and Control

The Alarm Surveillance and Control message set is similar to TBOS protocol in that it transports scan point and control information to monitor TABS equipment.

4.2.5 Extended TABS Address Frame Format

Note: This section is only applicable when making modifications to a master so that it can poll WS2000 using extended TABS addresses or when connecting a WS2000 to a master or host that uses extended TABS addressing.

Extended TABS address enables an application to extend TABS address capability beyond 32 without affecting other TABS equipment that can be on the same serial channel as the WS2000. Refer to AT&T Compatibility Bulletin Number 149 – *Maintenance Standards for Digital Transmission Systems*, Issue 4, November 1, 1989, for more information on the TABS protocol.

The TABS frame has three changes made to it to support extended addressing:

1. The Address/Command byte (Byte 2) of the Level 2 header is modified to fix the address in the address field to 31 and to use the reserved bit in the command field (Bit 1) to indicate an extended address command or response.

   If the address field is fixed to 31 and an address conflict occurs between an extended address entity and a normal TABS WS2000 address, the only address affected is address 31. Because the address is fixed at 31 (11111) and the command is 0x02 (010), the Address/Command byte is always fixed at 0xFA (1111 1010). See Figure 4-1.

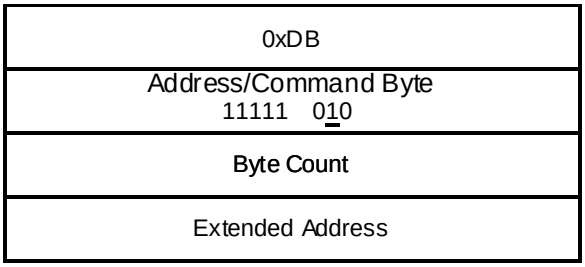

Figure 4-1 Extended TABS Level 2 Header

2. Added to the Level 2 header is an Extended Address field, making the Level 2 header four bytes long instead of the usual three bytes. The address ranges from 0 to 255 (00000000 – 11111111).

   Note: The WS2000 can accept either normal or extended messages for addresses 0 – 31. If polled in standard TABS format, WS2000 responds in standard TABS format. If polled in extended TABS format, WS2000 responds in the extended format. The extended format must be used to poll WS2000s with addresses greater than 31.

3. A dummy Checksum Miscalculation byte (0xAA) is appended to the I-field just before the checksum bytes, but is not used when calculating the checksum. A WS2000 with a standard TABS address adds this byte to the checksum, causing the message to be discarded because of a checksum error. See Figure 4-2 and Figure 4-3.

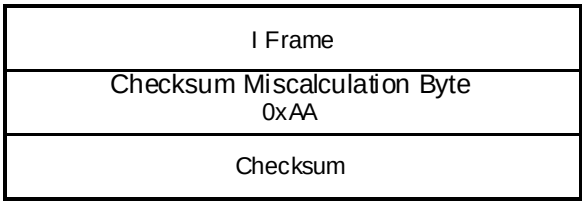

Figure 4-2 Checksum Miscalculation Byte

Level 2 Header– Extended Address Format

Command 0xDB	
11111 (0x31) Note 1	010 (0x02) Note 2
I Frame Byte Count	
Extended Address 0 – 255	
I Frame	
Checksum Miscalculation Byte 10101010 (0xAA) Note 3	
Checksum LSB	
Checksum MSB	

Level 2 Header – Normal Address Format

Command 0xDB	
00000	000
I Frame Byte Count	
I Frame	
Checksum LSB	
Checksum MSB	

Notes:

1. The address field is set to all ones (that is, address 31) to restrict possible address conflicts to TABS address 31.
2. Bit position 1 is a reserved bit position in normal TABS protocol, but indicates an extended address format command in this application.
3. The checksum calculation byte (0xAA), not used in the checksum calculation, prevents any normal TABS equipment from responding to an extended address format command.

Figure 4-3 Extended (Left) **and Normal** (Right) **TABS Addressing Formats**

4.2.6 TABS Analog Processing

A WS2000 with the analog option monitors and reports a maximum of 24 analog values to the operations center. WS2000 does so by packing the analog values into a display format that allows the operations center to retrieve the values using the same standard alarm surveillance and control messages used to retrieve scan point data.

WS2000 reports 12-bit binary numbers that represent the absolute magnitude of the monitored analog values. Four additional bits indicate when the analog value:

- Has failed
- Has changed or exceeded its deadband
- Is greater than the WS2000 input range
- Is negative in polarity

As a result of each analog value and its status bits occupying 16 bits, a 64-bit display can represent four analog values. Six displays (100 – 105)

report the 24 analog values that WS2000 can monitor. Figure 4-4 illustrates how analogs pack into display format for reporting to the operations center.

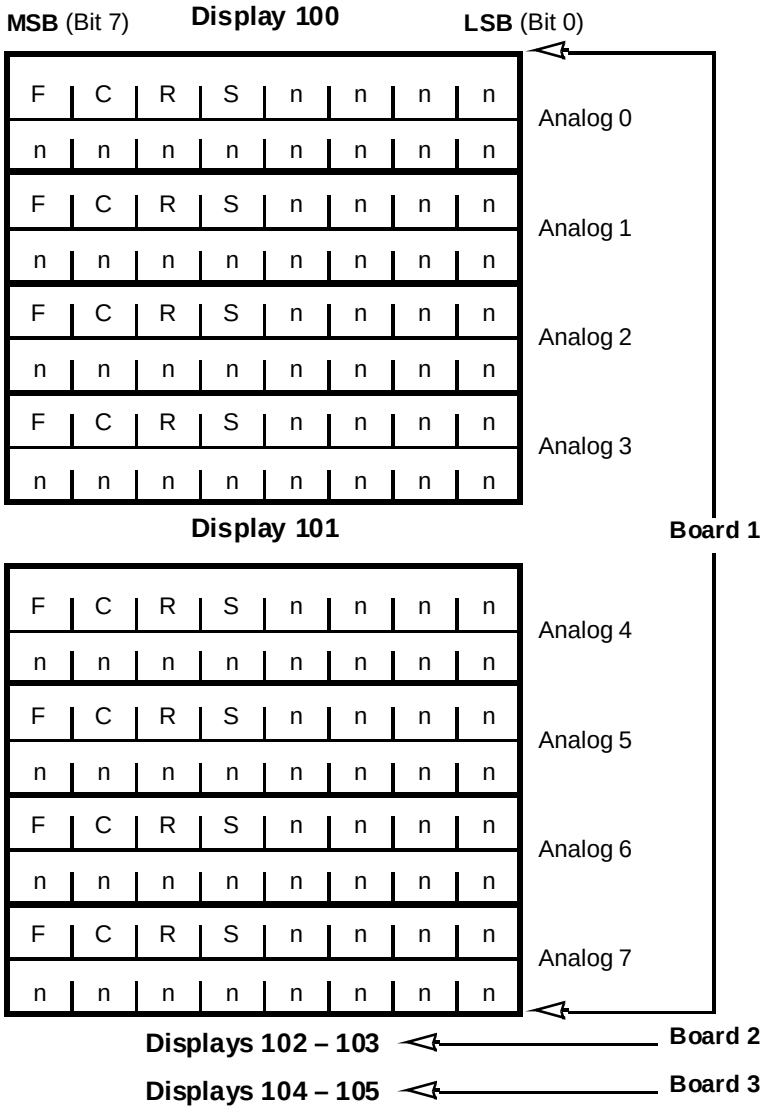

F	Failed Bit	0 = OK, 1 = Failure
C	Changed Bit	0 = No Change, 1 = Change
R	Overrange Bit	0 = In, 1 = Out
S	Sign Bit	0 = Positive, 1 = Negative
n	Analog Bit	12-Bit Value

Figure 4-4 Analog Display Format

Analog Deadbanding

Each analog value that WS2000 monitors has an associated, configurable deadband. A deadband is the permitted amount of variance

that, when exceeded, causes the value to be reported. Deadbanding prevents repeated reports to the operations center on insignificant changes in an analog value.

For example, assume that a particular analog has a scaling network of times 100 (x 100), resulting in a full-scale value of 100 Volts for the analog input. If 7 is the deadband value for the analog, the analog value must vary by more than 7 Volts from the most recently reported value before it is classified as a changed value. If the last report on the analog value was 50 Volts, the analog value must go above 57 Volts or below 43 Volts before it is classified as a changed analog.

Deadbanding becomes significant when an operations center chooses to poll for changes only rather than to scan for all data. When the operations center scans for changes, it receives reports only on those displays containing analogs that are classified as changed.

4.2.7 TABS Line Performance Monitoring

WS2000s with Analog and Pulse Accumulator (A&P) capability count pulses, then convert and process those counts to provide performance monitoring data as specified by the TABS protocol Line Performance Monitoring message set definition in CB149. A WS2000 TABS with A&P capability deviates from this definition in that it replaces the Out of Frame (OOF) indicator byte with an Unavailable Seconds (UAS) count because OOF does not apply in this application. UAS is discussed on the next page.

The Line Performance Monitoring message set provides commands that allow an operations center to request performance monitoring data on a specific line or on multiple lines. A line is a pulse data stream in which WS2000 counts and processes the pulses as though they represent errors occurring on some external equipment. WS2000 represents its eight pulse accumulator channels to the operations center as lines 0 through 7. The performance monitoring line counts reset to 0 after they report to the operations center and resume counting until the next request.

The following are often useful when processing error data:

- Monitor the line quality based on each monitoring second
- Record the number of seconds in which various error levels occurred

In the discussion that follows, the error levels are exclusive of each other in that they must have the following relationship:

errored seconds threshold < *degraded seconds threshold* < *severely errored seconds threshold*

The response to a performance monitor data request on a specific line includes the following parameters:

- *Line total error (pulse) count* – the number of pulses counted since the last line report (CB149 explains the E-format notation used to report the count)
- *Line errored seconds counts* – the number of seconds in which the pulse count is above a configurable threshold in the range 0 – 64998
- *Line degraded seconds count* – the number of seconds in which the pulse count exceeds the configurable degraded seconds threshold. The degraded seconds threshold, in the range 1 – 64999, must be larger than the errored seconds threshold and smaller than the severely errored seconds threshold.
- *Line severely errored seconds count* – the number of seconds in which the pulse count exceeds the configurable severely errored seconds threshold. The severely errored seconds threshold, in the range 2 – 65000, must be larger than the degraded seconds threshold.
- *Line unavailable seconds count* – The occurance of 10 consecutive severely errored seconds counts as 10 unavailable seconds. From that point on, each subsequent severely errored second adds to the count of unavailable seconds until the occurance of 10 consecutive non-severely errored seconds. The count stops until another occurance of 10 consecutive severely errored seconds and the cycle repeats.
- Indicator bits that notify the operations center of an errored line or that one or more of the line counts has overflowed.

In a given second, only one count (errored seconds, degraded seconds, or severely errored seconds) increments. For example, a second that contains errors exceeding thresholds for the errored seconds count and the degraded seconds count increments the degraded seconds count only.

WS2000 reports each of the line counts to the operations center as a number ranging from 0 through 255. To prevent any of these counts from overflowing, the operations center should retrieve counts from each performance monitoring line at least once every 255 seconds. In case of an overflow, WS2000 sets the overflow count to 0 and sets the missing data indicator bit for the line.

Although the discussion describes the information reported through the TABS line performance monitoring commands as error counts, this does not prevent using this format to count and report to the operations center pulses that have other meanings.

4.2.8 Display Mapping

In the role of a mediator, the WS2000 reports alarm/status information to the operations center and accepts control commands on a maximum 100 displays associated with monitored equipment connected to the WS2000 using TABS, TBOS, or discrete interfaces. To enable the operations center to understand and address the monitored equipment displays, the WS2000 must map (translate) the displays connected to it. That is, correspondence must exist between the operations center displays and the monitored equipment or network element displays. See Figure 4-5.

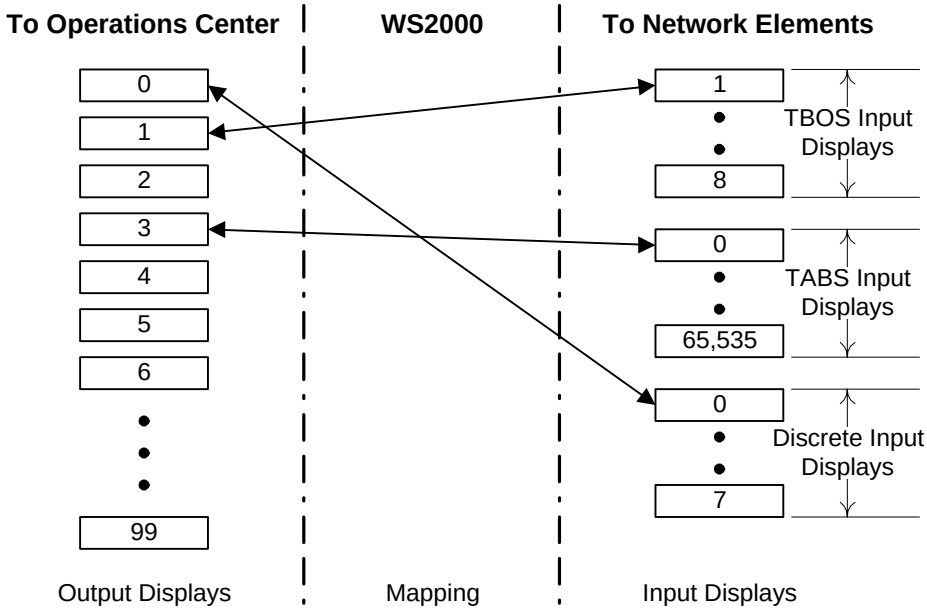

Figure 4-5 Scan (Alarm/Status) and Control Point Mapping

Output/Input Displays

Display numbers that the operations center understands are referred to as *output displays* while display numbers corresponding to the monitored equipment are referred to as *input displays*.

When mapping occurs on an output display, the display is assigned to:

- A specific input display on one of the serial channels
- A specific group of 64 discrete inputs on the main board or on one of the expander units

When a configuration makes a serial port a TBOS port, that port can support a maximum of eight displays of information (1 – 8).

When mapping occurs on an input display, the scan points and control points associated with that display have identical mapping. That is, to

map the scan points for a particular display separately from the control points is not possible.

Analog Voltage Displays

Because WS2000 can support a maximum of three analog cards (one in the WS2000 and one in each of two discrete expanders) and because each card is capable of monitoring eight analog voltages, the WS2000 can report a maximum 24 analog voltages to the operations center. To do so, WS2000 formats analog voltages in such a manner that one output display reports on four analog voltages. The reports appear on six output displays (100 through 105) as follows:

- Displays 100 and 101 report Board 1 (WS2000)
- Displays 102 and 103 report Board 2 (Expander 1)
- Displays 104 and 105 report Board 3 (Expander 2)

Because the displays always report these analog voltages using the same display numbers and positions, you can cannot configure the analog display map.

4.3 Configuration Templates

By converting serial and discrete information into an understandable format, WS2000 allows operation centers to monitor and control diverse groups of transmission and switching equipment. However, before WS2000 can perform this conversion, it must have information on equipment characteristics and parameters, such as the following:

- Physical characteristics (RS-232, RS-422, or RS-485) and communication rate of each serial interface
- Mapping information on alarms and controls from the remote equipment to the format used by the operations center
- Other attributes that affect how alarm/status information reports to the operations center

Planning the configuration setup before actually configuring a WS2000 is useful. The various configuration templates provide a method of defining serial channel characteristics, customizing process lists, and verifying input-to-output display mappings. Copy the templates and use them to organize and document your configuration. After completing the configuration templates, you can use them as a guide during WS2000 installation and programming. WS2000 provides the following five configuration templates:

- Serial Channel Configuration
- Display Configuration

- Process List Configuration
- Analog Configuration
- Accumulator/Performance Monitoring

Note: Appendix A shows these configuration templates and the attributes of the predefined process lists.

4.3.1 Serial Channel Configuration Template

You must define the following information when configuring a WS2000 Dialout serial channel:

- The protocol and interface type: RS-232/RS-422 (point-to-point), or RS-485 (multi-point)
- The communications rate of the channel: 1,200 or 2,400

The Serial Channel Configuration template provides a row for each configurable serial channel in the WS2000. Each row has a column in which to define the protocol/interface type and communications rate.

4.3.2 Display Configuration Template

You must define the following information when configuring a WS2000 display:

- The physical data source, either a serial channel number (Channel 2 – 9) or the WPIB address for a block of discrete data points, to be stored in the display

  Refer to **WPIB Addresses** on Page 3-17 for details on WPIB addresses.
- The protocol used if the data source is a serial port
- The reporting equipment TABS address if the data source is a TABS serial port
- The input display number for data gathered from serial channels
- The number for the process list that defines the desired attributes for the data points within the display
- A list of the display characters to be scanned and reported

  For example, scan characters 1 and 2 in Display 5 scan or report only on Scan Points 1 through 16 in Display 5.

The Output Display Configuration template provides a row for each output display reported by WS2000. Each row has a column to define the information described in the previous list.

When the data source stored in the display is a serial channel, ignore the column for the discrete WPIB address. Likewise, when the data source stored in the display is a block of discrete data points, ignore the columns for channel number, TABS address, and input display number.

Note: When a TABS or TBOS port fails to retrieve data for any of its assigned displays, the first 63 scan points of the display become 0 while point 64 becomes a 1.

Recommendation: On any display assigned to a serial port, classify Point 64 as a bipolar alarm to aid the operations center in failure detection.

4.3.3 Process List Configuration Template

You must select a list number and assign some combination of data point attributes to each data point in the display when configuring a WS2000 process list. The following includes possible data point attributes:

Bipolar	A data point classified as a bipolar alarm causes the point to report as a change when it goes from high-to-low or from low-to-high state. The Change-of-State (COS) indicator illuminates on both transitions. Bipolar has no meaning for points that are not also classified as alarms.
Alarm	A data point classified as an alarm point causes the point to report as a change when it goes from low-to-high state. The front-panel COS indicator also illuminates when the data point goes from low-to-high state.
Memory	Any change of state latches until it is reported.
Invert	The data state inverts before processing.
Status	A data point that is not classified as an alarm point reflects status and does not report in response to a change request.

The Process List Configuration template has a row to provide the proposed Process List number and a space for each display point. Fill out each entry in the Process List Configuration template to indicate which attributes apply to a corresponding point.

Use the first letter of each attribute to specify the attribute for each point. Use a blank space to represent Status. Also list the attributes in the order in which they appear on the Wesmaint display to improve entry and configuration verification. Wesmaint always lists the process list attributes in the following order:

B A M I:

B = Bipolar	M = Memory
A = Alarm	I = Inverted

The list attribute BAMI indicates that the corresponding point is a bipolar alarm with memory and the state inverts before processing.

4.3.4 Analog Configuration Template

You must define the following information when configuring a WS2000 analog input:

- The expander number and analog input number that corresponds to the monitored voltage

  In this context, the main WS2000 is Expander 0.

- The deadband to apply to the analog value

  This is a percent value ranging from 0 – 99%.

4.3.5 Performance Monitoring Template

You must define the following information when configuring a WS2000 performance monitoring line (also known as a pulse accumulator channel):

- The pulse accumulator channel that corresponds to the monitored pulse stream
- The count threshold to declare an errored second (0 – 64998)
- The count threshold to declare a degraded second (1 – 64999)
- The count threshold to declare a severely errored second (2 – 65000)

Note: These thresholds must maintain the following relationships: errored seconds < degraded seconds < severely errored seconds. The default values are 1 < 10 < 100, respectively. Thus, when you want to change a threshold value to a higher value than the threshold above or a lower value than the threshold below, you must first change the higher/lower threshold value.

For example, before you can change the default value of 10 to 105, you must first change default value 100 to some value greater than 105. Likewise, before you can change default value 100 to 8, you must first change default value 10 to some value lower than 8, yet greater than 1.

4.4 WS2000 Step-by-Step Configuration

This section details the step-by-step procedures for configuring a WS2000 TABS using the Wesmaint terminal. Follow the procedures in the given order because the end of one procedure sets the context for the following procedure. The same procedure in Section 5 assumes you have just entered the procedure. This section assumes that the reader is familiar with the material presented in *Configuration Overview* and *Configuration Templates*.

4.4.1 Configuring the Maximum Number of Displays and TABS Addresses

Because some installations monitor a large number of TABS addresses while others monitor a large number of displays, the CONFIG DSPLY/ADR command allows you to select the maximum number of displays and addresses. Available selections are as follows:

- 100 displays (0 – 99) and 32 TABS addresses (0 – 31), or
- 90 (0 – 89) displays and 72 TABS addresses (0 – 71)

Use Procedure 4-1 to configure the maximum number of displays and TABS addresses.

Procedure 4-1 Configuring the Maximum Number of Displays and TABS Addresses

Step	Procedure

1. Press CMD until the window displays WESMAINT MODE and press SEL.

2. A. If the window displays CONFIG MODE, go to Step 4.

B. If the window displays **`NORMAL MODE`**, press ⇑.
The window displays ***`CONFIG MODE?`***.

3. Press YES.
The window momentarily displays `STOPPING` ***`TASKS`***, *then displays* ***`CONFIG MODE`***.

4. Press CMD.
The window displays ***`WESMAINT MODE`***.

5. Press once.
The window displays ***`CONFIG DSPLY/ADR`***.

6. Press SEL.

The window displays ***100/32 DPLY/ADR*** *or* ***90/72 DPLY/ADR****.*

7. Press DATA and select the desired maximum number of displays and addresses using YES and NO.

   Note: If the unit has a previously installed database that contains more than 32 TABS addresses and you select **100/32 DPLY/ADR**, the following error message appears:

   MUST REDUCE NUMBER OF CONFIGURED TABS ADDRESSES BEFORE INCREASING NUMBER OF DISPLAYS.

8. Press CMD.
   The window displays ***CONFIG DSPLY/ADR****.*

4.4.2 Configuring the WS2000 TABS Address

You must configure the TABS address that the operations center uses to identify the WS2000. The address (0 – 31 for normal addressing or 0 – 255 for extended addressing) discriminates the particular WS2000 from any others that are connected to the same operations center serial port.

Use Procedure 4-2 to configure TABS addresses.

Procedure 4-2 Configuring the WS2000 TABS Address

Step	Procedure

1. Press ⇑ until the Wesmaint window displays **TABS REMOTE ADDR** (about six times).

2. Press **SEL**.

Modifying the TABS Address

3. Press **DATA** to change the TABS address.
   The ***TABS ADDR=^*** *prompt appears.*

4. Enter a TABS address (0 – 255) using the hex keypad and press **ENTR**.
   The window displays the new TABS address.

5. Press **CMD**.
   The window displays ***TABS REMOTE ADR****.*

4.4.3 Configuring Serial Channels

Configuring the serial channels begins with defining the physical characteristics and protocols. During configuration, verify that the RS-422/RS-485 straps, located on the rear of the WS2000, are in correct position. Refer to Section 3 for details on the serial port strapping and cabling options.

Use Procedure 4-3 to configure the serial channels.

Procedure 4-3 Configuring the Serial Channels

Step	Procedure

1. Press ⇓ three times.
   The window displays ***SERIAL CH INTFC****.*
2. Press **SEL**.
   The window displays ***CH1=HOST****. You cannot change this because it indicates that serial channel 1 is dedicated to the host port.*
3. Press ⇑.
   The window displays ***CH1=RS232/485*** *or* ***CH1=RS422****.*
4. Press **DATA** and select the desired physical interface using **YES** and **NO**.
5. Press ⇑.
   The window displays ***CH1=1200 BAUD*** *or* ***CH1=2400 BAUD****.*
6. Press **DATA** and select the desired baud rate using **YES** and **NO**.
7. Press ⇑.
   The window displays ***CH2=TABS*** *or* ***CH2=TBOS****.*
8. Press **DATA** and select the desired protocol by using **YES** and **NO**.
9. Press ⇑.
   The window displays ***CH2=RS232/485*** *or* ***CH2=RS422****.*
10. Press **DATA** and select the desired physical interface using **YES** and **NO**.
11. Press ⇑.
    The window displays ***CH2=1200 BAUD*** *or* ***CH2=2400 BAUD****.*

12. Press **DATA** and select the desired baud rate using **YES** and **NO**.

13. Press ⇑ and perform Steps 7 – 12 for the remaining serial channels.

14. Press **CMD**.
The window displays ***SERIAL CH INTFC***.

4.4.4 Configuring Process Lists

The WS2000 comes with many predefined process lists, as shown in Appendix A. If none of the predefined lists provides a set of scan point attributes that match requirements for reported displays, build a new list from scratch or modify an existing list. Refer to *Process List Configuration Template* on Page 4-15 for attribute definitions (BAMI).

In this configuration function, several choices appear: View List, Modify List, Create List, Duplicate List, and Delete List. Select **CREATE LIST** to generate a new process list. If the new list is similar to an existing list, a quicker method is to use the **DUPLICATE LIST** function, then edit the newly generated list using the **MODIFY LIST** function. When you select **MODIFY LIST?**, Wesmaint offers the Auto Propagate function, which copies the attributes assigned to the first scan point and applies them to each of the remaining scan points in the process list.

Use Procedure 4-4 to configure a process list.

Procedure 4-4 Configuring a Process List

Step	Procedure

1. Press ⇓ once.
The window displays ***CONFIG LISTS***.

2. Press **SEL**.
The window displays ***VIEW LIST?***.

3. Use **NO** to reach the desired function: **VIEW LIST**, **MODIFY LIST**, **CREATE LIST**, **DUPLICATE LIST**, or **DELETE LIST**. When the desired function appears, press **YES**.
The Wesmaint window prompts for a list identifier ***LIST NUMBR=^***.

4. **A.** If you select **MODIFY LIST**, go to Step 5.

   B. If you select **CREATE LIST**, go to Step 11.

C. If you select **DUPLICATE LIST**, go to Step 12.
*When you select **DUPLICATE LIST**, the Wesmaint window displays **DUP FROM=^**.*

Modifying a Process List

5. Enter the four-digit list identifier using the hex keypad and press **ENTR**.
*The window prompts **AUTO PROPAGATE?**.*

6. Press **YES** to enable the Auto Propagate function or **NO** to disable it.

Note: If you select the Auto Propagate function, any changes you make to the attributes of one point affect the attributes of all subsequent (higher) points in the list.

7. Use ⇑ and ⇓ to view the point attributes in the list.

8. Use **RUN**, **STOP**, **ON**, **OFF**, **YES**, **NO**, **DATA**, and **CLR** to modify the attributes of the point displayed in the window as follows:

Attribute	Press	
	To Select	To Deselect
Bipolar	**RUN**	**STOP**
Alarm	**ON**	**OFF**
Memory	**YES**	**NO**
Invert	**DATA**	**CLR** (clear all)

9. Press **ENTR** to store the modified attributes in WS2000 nonvolatile memory.
*The Wesmaint window prompts **STORE LIST?**.*

10. Press **YES** to store the list or **NO** to continue with modifications.

Note: Pressing **PT**, **SEL**, **DSPY**, or **CMD** before you store a modified list causes WS2000 to ignore all modifications.

Creating a Process List

11. Enter the four-digit list identifier using the hex keypad and press **ENTR**.

A. *If the entered list number does not already exist, WS2000 creates a new list and automatically invokes the Modify List function.*

Go to Step 5 and continue the procedure.

B. *If the entered list number already exists, the window briefly displays the message* ***LIST EXISTS NOW****, followed by the prompt* ***MODIFY LIST?****.*

Press **YES** to modify the existing list and go to Step 5 or **NO** to select another operation.

C. *If the window displays* ***NO SPACE LEFT****, you must delete an existing list to make room for the new list. Go to Step 3 and select* ***DELETE LIST****. The Wesmaint window prompts* ***DELETE LIST?***

Press **YES**, enter the four-digit list identifier using the hex keypad, and press **ENTR**.

Note: The WS2000 EEPROM has space for 100 process lists.

Duplicating a Process List

12. Enter the four-digit list identifier using the hex keypad and press **ENTR**.
If the specified list does not exist, the window briefly displays ***NO SUCH LIST****.*

13. Repeat Step 12.
After you select the From list, the window prompts ***DUP TO=^****.*

14. Enter the list identifier to be assigned to the new list using the hex keypad and press **ENTR**.

A. *If the specified list already exists, the window diplays* ***LIST EXISTS NOW****, followed by the prompt* ***OVERWRITE?****.*

Press **YES** to overwrite the existing list or **NO** to repeat Step 12.

B. *If the specified list does not exist already, WS2000 creates the list using the attributes from the list specified in Step* 12*. The window prompts* ***MODIFY LIST?****.*

Press **YES** to enter the Modify mode or **NO** to select another operation.

C. *If the window displays* ***NO SPACE LEFT****, perform Step 3, selecting* ***DELETE LIST****. The Wesmaint window prompts* ***DELETE LIST?****.*

Press **YES**, enter the four-digit list identifier using the hex keypad, and press **ENTR**.

15. Press **CMD**.
The window displays ***CONFIG LISTS****.*

4.4.5 Configuring Output Displays

Now that you have established the maximum number of displays and TABS addresses, determined the WS2000 TABS address, and have prepared the serial ports and process lists, you are ready to map and configure the output displays. By definition, output displays report to the operations center over the host port (Channel 1). You must map output displays to an input serial channel or a block of discrete inputs. When a display maps to a serial channel, the display must also map to an input display. After mapping, you can assign a process list to and define a character scan list for the display.

Use Procedure 4-5 to configure the output displays.

Procedure 4-5 Configuring the Output Displays

Step	Procedure

1. Press ⇓ once.
The display reads ***CONFIG DISPLAYS****.*

2. Press **SEL**.
The window displays the first screen: ***00 XXXX YYZZ****, where* ***00*** *represents output display number 00 and can range to 89 or 99, depending on the maximum you set in Procedure 4-1.*

Note: At this point, you have two choices: press **PT.** and enter a specific display number or press ⇑ or ⇓ until you reach the desired display number.

Each display definition consists of three screens:

- The first screen identifies the data source (XXXX).
  - If the data source is a serial input port:
    - –TAXX indicates the data source is a TABS serial port with address 0 – 31.
    - –TBOS indicates the source is a TBOS serial port.
    - –XXXX can also indicate SPARE.
    - –YY is C2 – C5 or C2 – C9 (depending on the WS2000 hardware). C6 – C9 is always TBOS.
    - –ZZ is the input display number (TABS, 0 – 65535; TBOS, 1 – 8).

- If the data source is a discrete input:
  - DISC/SPARE
  - YY is the expander, ZZ is the WPIB address:

Expander	WPIB Address
0 (WS2000	00
1	08
2	10

- The second screen identifies the assigned process list number.
- The third screen is the scan list, showing which characters to scan.

3. Select each output display for configuration using ⇑ or **PT**.

4. **A.** If the data source for the display is a TABS input display, specify the following:
- Serial channel (2 – 5)
- TABS address (0 – 31) of the reporting monitored equipment
- TABS Input Display number: 0 – 65535
- Process list number
- Character scan list (1 – 8)

B. If the data source for the display is a TBOS input display, specify the following:
- Serial channel (2 – 9)
- TBOS Input Display number (1 – 8)
- Process list number
- Character scan list (1 – 8)

C. If the data source for the display is a discrete input, specify the following:
- The channel as DISC for discrete inputs
- Expander number: 0 (WS2000) or 1 – 7
- Process list number
- Character scan list (1 – 8)

D. If the display is a spare, enter channel number 0.

5. Press **CMD**.
The window displays ***CONFIG DISPLAYS****.*

4.4.6 Configuring Analog Inputs

You must enable each analog input for use and associate a deadband with each analog input.

Use Procedure 4-6 to configure the analog inputs.

Procedure 4-6 Configuring Analog Inputs

Step	Procedure

1. Press ⇑ four times.
   The window displays ***CONFIG ANALOGS***.

2. Press **SEL**.
   The window displays the first analog on Expander 0 (WS2000).

Selecting an Analog

At this point, you have two choices: press **PT.** to go directly to a specific analog number or use ⇑ or ⇓ to cycle through the available analog numbers until you reach the desired analog number.

3. Press **PT** to select a specific analog.
   The Wesmaint window prompts with ***EXPANDER=^***.

4. Enter the desired expander number (0 – 2) using the hex keypad and press **ENTR**.
   The Wesmaint window prompts with ***CHANNEL=^***.

   Note: 0 represents the WS2000 while 1 and 2 represent the first two discrete expanders.

5. Enter the desired analog input number (0 – 7) using the hex keypad and press **ENTR**.

Changing the Deadband Window Size

6. To change the deadband size, press **DATA**.
   The Wesmaint window prompts with ***ANALOG WIND=^***.

7. Enter the size of the deadband window (0% – 99%) and press **ENTR**.
   The Wesmaint window displays the new deadband window size.

Turning Analog Scanning On or Off

8. **A.** To enable scanning of an analog input, press **ON**.
The Wesmaint window displays ***ON****. WS2000 scans and reports the analog when in Normal mode.*

   B. To disable scanning of an analog input, press **OFF**.
The Wesmaint window displays ***OFF****. WS2000 does not scan the analog.*

   Note: If you turn On an analog that is not equipped (NE), the analog reports to a polling master as being in a failed state.

9. Press **CMD**.
The window displays ***CONFIG ANALOGS****.*

4.4.7 Configuring Pulse Accumulators

You must enable each pulse accumulator input for use and to each assign threshold values for errored second, degraded second, and severely errored second.

Use Procedure 4-7 to configure the accumulator inputs.

Procedure 4-7 Configuring Pulse Accumulator Inputs

Step	Procedure

1. Press ⇑ one time.
The window displays ***CONFIG ACCUM.****.*

2. Press **SEL**.
The window displays the first accumulator channel P0.

Selecting an Accumulator Channel

At this point, you have two choices: press **PT.** to go directly to a specific accumulator channel or use ⇑ or ⇓ to cycle through the available accumulator channels until you reach the desired accumulator input. As you press ⇑, the display cycles through the errored, degraded, and severe thresholds before advancing to the next accumulator input. Likewise, as you press ⇓, the display cycles in the opposite direction. Input 7 wraps to Input 1 when going up; Input 1 wraps to Input 7 when going down.

3. Press **PT** to select a specific input.
The Wesmaint window prompts with ***CHANNEL=^****.*

4. Enter the desired accumulator input number (0 – 7) using the hex keypad and press **ENTR**.
The Wesmaint window prompts with ***Px ON/OFF NE/EQ****.*

Note: *x* represents the accumulator input (0 – 7), ON or OFF indicates whether scanning/collection is enabled, and NE/EQ indicates whether the input is equipped.

Turning Accumulator Collection On or Off

5. **A.** To enable scanning of an accumulator input, press **ON**.
The Wesmaint window displays ***ON****. WS2000 scans and reports the accumulator when in Normal mode.*

B. To disable scanning of an accumulator input, press **OFF**.
The Wesmaint window displays ***OFF****. WS2000 does not scan the accumulator input.*

Note: If you turn On an accumulator input that is not equipped (NE), the input reports to a polling master as being in a failed state.

Setting the Count Thresholds

6. Press ⇑ to cycle through the thresholds: **ERROR**D, **DEGRAD**, **SEVERE**. When at the desired threshold, press **DATA**.
The Wesmaint window displays ***Threshold=^****.*

7. Enter the desired threshold value using the hex keypad and press **ENTR**.
If the value is within the threshold value range and maintains the relationships of errored seconds < degraded seconds < severely errored seconds, the Wesmaint window displays the entered value. Otherwise, the window briefly displays ***INVALID INPUT****, then redisplays* ***Threshold=^*** *for corrective action.*

Returning to the Command Menu

8. Press **CMD**.
The window displays ***CONFIG ACCUM.****.*

9. Press **CMD**.
The window displays ***WESMAINT MODE****.*

4.4.8 Verifying the New Configuration

Use Procedure 4-8 to verify the new configuration.

Procedure 4-8 Verifying a New Configuration

Step	Procedure

1. Press **CMD** until the window displays **`WESMAINT MODE`** and press **SEL**.

2. **A.** If the window displays **`NORMAL MODE`**, go to Step 4.

   B. If the window displays **`CONFIG MODE`**, press ⇑.
   *The window displays **`NORMAL MODE?`**.*

3. Press **YES**.
   *The window momentarily displays **`INITIALIZING…`**, then **`WESMAINT READY`**.*

4. Press **CMD**.
   *The window displays **`WESMAINT MODE`**.*

5. Select the TABS Remote Address function (press ⇑ five times) and verify the TABS address assigned to WS2000.

6. Select the Serial Channel Interface function (press ⇓ once).

7. Select each configured serial channel and verify the following:
   - Protocol (TABS/TBOS)
   - Interface type (RS-232/RS-422/RS-485)
   - Baud rate (1,200 or 2,400 bps)

8. Select the Configure Lists function (press ⇓ once).

9. Select each configured process list and, using the View List function, verify the process list attributes.

10. Select the Configure Displays function (press ⇓ once).

11. Select each output display using ⇑ or ⇓ or **PT.**.

12. **A.** If the data source is a TABS input display, verify the following:
    - Serial channel number
    - Input address
    - Input display number

- Process list number
- Character scan list numbers

B. If the data source is a TBOS input display, verify the following:

- Serial channel number
- Input display number
- Process list number
- Character scan list numbers

C. If the data source is a discrete input, verify the following:

- Expander number
- Process list number
- Character scan list numbers

13. Select the Configure Analogs function (press ⇑ four times).

14. Select each analog using ⇑ or ⇓ or **PT.** and verify the following:

- Enabled status
- Deadband

15. Select the Configure Accumulators function (press ⇑ once).

16. Select each accumulator input using ⇑ or ⇓ or **PT.** and verify the following:

- Enabled status
- Errored seconds threshold
- Degraded seconds threshold
- Severely errored seconds threshold

4.5 Configuration Check List

Use the following check list when configuring the WS2000:

A. Enter Config mode

B. Configure WS2000 TABS address (Procedures 4-1 and 4-2)

C. Configure serial channel interfaces (Procedure 4-3)

D. Configure process lists (Procedure 4-4)

E. Configure displays (Procedure 4-5)

F. Configure analogs (if applicable) (Procedure 4-6)

G. Configure accumulators (if applicable) (Procedure 4-7)

H. Enter Normal mode

I. Test with operations center/operations system

5 Maintenance Interface

5.1 Interface Hardware

The WS2000 maintenance unit, Wesmaint, is a multi-functional local display that provides a user interface to the WS2000 and is available in either a rack-mount or portable version. The front panel consists of 16 hexadecimal keys, 16 function keys, and a 16-character LED display. The serial cable that connects to JB3 or P5 on the WS2000 supplies power for the Wesmaint unit.

Besides the rack-mount and portable Wesmaint versions, Westronic offers two PC Wesmaint software packages that provide a Wesmaint interface using a PC as the "Wesmaint" unit. Besides the Wesmaint function, the PC Wesmaint software retrieves, views, and downloads WS2000 configuration information. In lieu of a Wesmaint or PC Wesmaint, you can accomplish configuration through a VT100 terminal using equivalent ASCII characters.

5.2 Cabling

If you are using a PC Wesmaint version, refer to the PC Wesmaint manual (994-T010 for DOS or 994-T055 for Windows 95).

If you are using a rack-mount Wesmaint, connect it to P5 on the rear of the WS2000 and install a termination plug on JB3, jumpering Pins 18 and 25. The termination plug (PN 977-T042) is available from Westronic. Table 5-1 shows pinout information for connector JB3.

Note: Only install the termination plug ***after*** applying power and remove it ***before*** removing power.

Table 5-1 Front Panel Wesmaint Connector JB3

Pin	Function
2	Transmit
3	Receive
7	Common
11	+12 Vdc
13	–12 Vdc
18	+5 Vdc
25	Program Write Enable

If you are using the portable Wesmaint unit or a VT100 terminal, connect it to the DB25 connector (JB3) on the front of the WS2000. You can also connect a VT100 terminal to P5. Use the terminations shown in Table 5-2.

Table 5-2 VT100 Maintenance Connections

VT100 (9-Pin DTE)	**JB3** (25-Pin DCE)	**P5** (8-Pin DTE)
Pin 2 (Rx)	Pin 3 (Rx)	Pin 1 (Tx)
Pin 3 (Tx)	Pin 2 (Tx)	Pin 2 (Rx)
Pin 5 (Com)	Pin 7 (Com)	Pin 4 (Com)
Jumper 7 to 8, 4 to 6 (PC only)	Jumper Pin 18 to 25	No Jumper Required

The Wesmaint unit or VT100 displays menu choices when you press **CMD** (Command) or **DSPY** (Display) – (@ or A, respectively, for the VT100). This indicates that the WS2000 is operating properly and is ready for configuration according to site requirements. If nothing appears on the screen or the message **EEPROM CORRUPT** appears, a memory problem has occurred.

5.3 Wesmaint Functions

When you use a rack-mount Wesmaint unit, the initial display reads **WESMAINT READY**. When you use a portable or PC Wesmaint, the initial display is blank. If you press **CMD**, the display reads **WESMAINT MODE**. If you press **DSPY**, the display reads **VERSION NUMBER**. The Wesmaint software can then accept keypad entries. Two types of Wesmaint functions are available:

- Display – to view data
- Command – to program data

Press **DSPY** (@ on VT100) to access the menu of display functions or **CMD** (A on VT100) to access the menu of command functions. Both keys are active at all times.

When you press **DSPY** or **CMD** (@ or A), the first function title in that menu displays. You can view the list of function titles by pressing ⇑ (H) or ⇓ (L) (see Figure 5-2 or Figure 5-3). The same menus appear whether Wesmaint is in Normal or Configuration mode; however, as shown in these two figures, depending on the Wesmaint mode, some menu functions become invalid or view only when you seek to access them.

To access a function, press **DSPY** if the function is in the **Display** menu or **CMD** if the function is in the **Command** menu. Press ⇑ or ⇓ until the

function title displays, then press **SEL** (Select) – (C on VT100). You can exit or abort a function at any time by pressing **DSPY** or **CMD** again.

5.3.1 Wesmaint Unit Key Layout

Figure 5-1 illustrates the Wesmaint panel and its key pads.

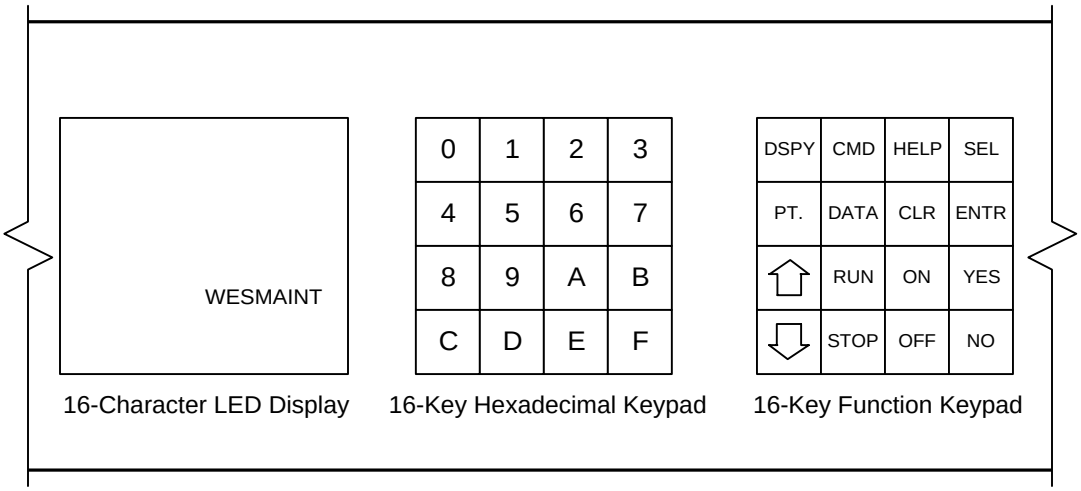

Figure 5-1 WS2000 Wesmaint Maintenance Unit

5.3.2 ASCII Terminal Key Layout

Table 5-3 provides an ASCII cross-reference of Wesmaint function keys if you use a VT100 terminal instead of a Wesmaint.

WS2000 Characters

The WS2000 Tx/Rx characters consist of one start bit, seven data bits, even parity, and one stop bit at a data rate of 9,600 bps.

Caution: If you are using a PC, the arrow key can cause a "?" prompt to appear on the screen, at which point the WS2000 appears to lock up. The question mark prompt is a WS2000 mode that allows a PC ASCII file to load into the EEPROM.

To get out of the “lock up” question mark prompt, perform the following steps.

1. Enter @
2. Press Carriage Return (ENTER)
3. Enter @

These steps should bring back the Version Number or the Wesmaint Mode function.

Table 5-3 Wesmaint-ASCII Terminal Functional Equivalence

Wesmaint Key	ASCII Character	Wesmaint Key	ASCII Character
0	0	DSPY	@
1	1	CMD	A
2	2	HELP	B
3	3	SEL	C
4	4	PT	D
5	5	DATA	E
6	6	CLR	F
7	7	ENTR	G
8	8	⇑	H
9	9	RUN	I
A	:	ON	J
B	;	YES	K
C	<	⇓	L
D	=	STOP	M
E	>	OFF	N
F	?	NO	O

The Craft firmware driver in the WS2000 issues a Carriage Return (CR) character after each line.

5.3.3 Operator Prompts

While using Wesmaint or a VT100 to program a WS2000, the software prompts for user information. The following explains these operator prompts.

5.3.3.1 Question Mark (?)

Certain functions are questions followed by a question mark (?). These questions require a Yes or No response. Press **YES** or **NO**, as appropriate.

5.3.3.2 Numerical Input Prompt (^)

Certain functions require you to input numerical data. When the numerical input prompt (^) displays, key in the appropriate data using the hex keypad. After keying in the data, press **ENTR** (G) to signal the end of data entry. If you make a mistake while entering data and notice this before pressing **ENTR**, press **CLR** (F) to erase the data and start over. Pressing **ENTR** without entering any data is equivalent to entering the value 0.

5.3.4 Function Menus

The following sections (*Display Functions* on Page 5-6 and *Command Functions* on Page 5-21) contain detailed descriptions of all Wesmaint menu functions. The descriptions outline the formats of the displayed data, indicate which keys are active, and provide step-by-step operating procedures.

For a discussion of how to use the various Wesmaint functions to configure a WS2000, refer to Section 4. *Configuration Overview* on Page 4-1 includes more information about WS2000 configuration elements, such as process lists, displays, and channels.

Some Wesmaint functions are valid only in Normal mode, some only in Config mode, and some functions are valid in either mode. See *Wesmaint Mode* on Page 5-22 for a discussion of Normal versus Config mode.

5.4 Display Functions

Figure 5-2 shows the Display functions and the function purpose.

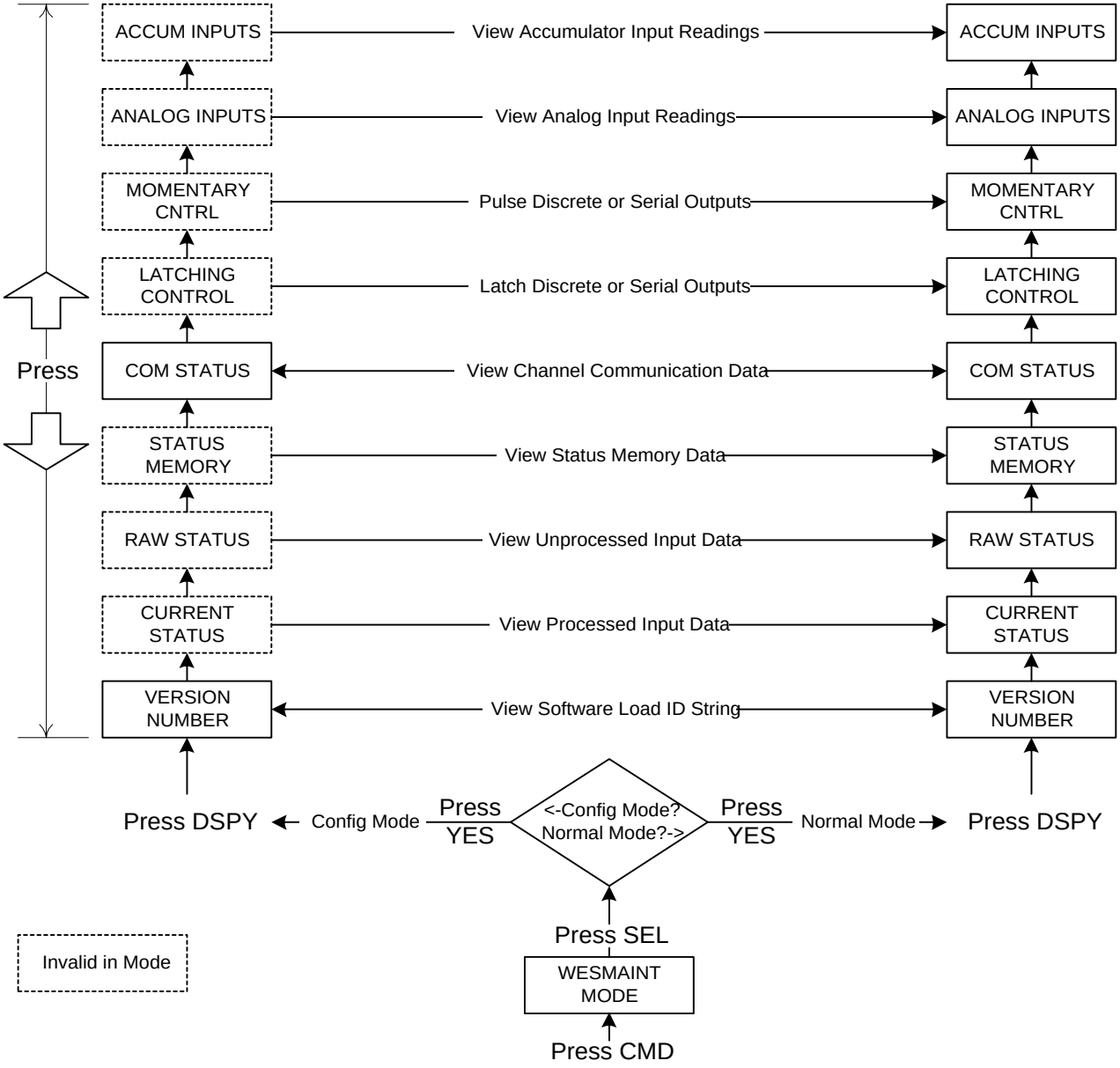

Figure 5-2 Display Function Commands

5.4.1 Version Number

The following describes how to use Wesmaint to view the current WS2000 software version.

Menu: DSPY

Purpose: To identify the software load stored in the EPROM. Use this identification to report any problems with WS2000 firmware.

Screen Format: After you select the function, the stored software load identity scrolls through the display window.

Keys Used: The following keys are active during this function:

- ⇑**:** Scroll foward to view software load identity
- ⇓**:** Scroll backward to view software load identity
- **STOP:** Stop scrolling software load identity
- **RUN:** Start scrolling software load identity

Valid Modes: Normal, Config

Operation: Perform Procedure 5-1 to view the WS2000 software revision.

Procedure 5-1 Viewing the WS2000 Software Load Version

Step	Procedure

Selecting the Function

1. Press **DSPY** until the window displays **`VERSION NUMBER`**.

2. Press **SEL**.
   The software version information scrolls across the window.

Exiting the Function

3. Press **DSPY** or **CMD**.
   *The window displays **`VERSION NUMBER`** or **`WESMAINT MODE`**, respectively.*

5.4.2 Current Status

The following describes how to view the current status of the WS2000 input data.

Menu: DSPY

Purpose: To view the input data status as seen by the master station. Data processes according to the point attributes defined in the related

process lists. Refer to *Process Lists* on Page 4-1 for a discussion of process lists.

Screen Format: The following is the screen format for this function:

C*xx-y zzzzzzzz*

C	Current Status Menu
xx	Output Display Number (0 – 89/99)
yy	Character Number (1 – 8)
zzzzzzzz	Data Bit Status

Note: The data bits appear with the Least Significant Bit (LSB) on the left and the Most Significant Bit (MSB) on the right: Bits 1, 2, 3, 4, 5, 6, 7, 8.

A flashing asterisk (*) signifies that one or more points with alarm attributes have the status memory bit On. That is, a change not yet reported to the master station has occurred on a data point. When any data point has alarm and memory attributes, the state shown may/may not be the current state of the input. Once the alarm reports to the master station, the asterisk (*) disappears.

Keys Used: The following keys are active during this function:

- ⇑**:** Advance to the next character in the current output display or to the first character in the next output display
- ⇓**:** Back to the previous character in the current output display or to the last character in the previous output display
- **PT** (POINT)**:** Select a particular output display number and character for viewing
- **CLR** (CLEAR)**:** Clear the status memory bits for the onscreen character

Note: The **CLR** key affects the data that reports to the master station. The primary use for this key is when WS2000 is in an offline diagnostic mode. Use this command key with discretion when WS2000 is in an online mode.

Valid Modes: Normal mode only

Operation: Perform Procedure 5-2 to view the current status of the WS2000 input data.

Procedure 5-2 Viewing the Current Status of WS2000 Input Data

Step	Procedure

Selecting the Function

1. Press **DSPY** until the window displays **VERSION NUMBER**.

2. Press ⇑ once.
   The window displays ***CURRENT STATUS***.

3. Press **SEL**.

Selecting a Display/Character

4. **A.** Press ⇑ to view the next character of the current output display or the first character of the next output display.

   B. Press ⇓ to view the previous character of the current output display or the last character in the previous output display.

   C. Press **PT** to select a specific output display number and character for viewing.
   The window prompts with ***DISPLAY=^***.

   - Enter the desired output display number (0 – 89/99) using the hex keypad and press **ENTR**.
     The window prompts with ***CHARACTER***=^.
   - Enter the desired character number (1 – 8) using the hex keypad and press **ENTR**.

Clearing Status Memory Bits

5. Press **CLR** to clear the status memory bits for the current output display and character.

Exiting the Function

6. Press **DSPY** or **CMD**.
   The window displays ***CURRENT STATUS***.

5.4.3 Raw Status

The following describes how to view the input data before WS2000 processes the information.

Menu: DSPY

Purpose: To view the status of raw input data before it processes according to the point attributes defined in the related process lists. Refer to *Process Lists* on Page 4-1 for a discussion on process lists.

Screen Format: The following is the screen format for this function:

R*xx-y zzzzzzzz*

R	Raw Status Menu
xx	Output Display Number (00 – 89/99)
yy	Character Number (1 – 8)
zzzzzzzz	Data Bit Status

Note: The data bits appear with LSB (1) on the left and MSB (8) on the right.

Keys Used: The following keys are active during this function:

- ⇑**:** Advance to the next character in the current output display or to the first character in the next output display
- ⇓**:** Back to the previous character in the current output display or to the last character in the previous output display
- **PT** (POINT)**:** Select a particular output display number and character for viewing

Valid Modes: Normal mode only

Operation: Use Procedure 5-3 to view the raw status of the WS2000 input data.

Procedure 5-3 Viewing the Raw Status of WS2000 Input Data

Step	Procedure

Selecting the Function

1. Press **DSPY** until the window displays **VERSION NUMBER**.
2. Press ⇑ until the window displays RAW STATUS.
3. Press **SEL**.

Selecting a Display/Character

4. **A.** Press ⇑ to view the next character of the current output display or the first character of the next output display.

   B. Press ⇓ to view the previous character of the current output display or the last character in the previous output display.

C. Press **PT** to select a specific output display number and character for viewing.
The window prompts with ***DISPLAY=^***.

- Enter the desired output display number (0 – 89/99) using the hex keypad and press **ENTR**.
  The window prompts with ***CHARACTER=^***.
- Enter the desired character number (1 – 8) using the hex keypad and press **ENTR**.

Exiting the Function

5. Press **DSPY** or **CMD**.
The window displays ***RAW STATUS***.

5.4.4 Status Memory

The following describes how to view an unreported change-of-state for a data point.

Menu: DSPY

Purpose: To view data points that have the status memory bit On, which indicates that the data point has experienced an unreported change of state.

Screen Format: The following is the screen format for this function:

```
Mxx-y zzzzzzzz
```

M	Status Memory Menu
xx	Output Display Number (00 – 89/99)
yy	Character Number (1 – 8)
zzzzzzzz	Data Bit Status

Note: The data bits appear with LSB (1) on the left and MSB (8) on the right.

Keys Used: The following keys are active during this function:

- ⇑**:** Advance to the next character in the current output display or to the first character in the next output display
- ⇓**:** Back to the previous character in the current output display or to the last character in the previous output display
- **PT** (POINT)**:** Select a particular output display number and character for viewing

Valid Modes: Normal mode only

Operation: Use Procedure 5-4 to view the memory status of the WS2000 input data.

Procedure 5-4 Viewing the Status Memory

Step	Procedure

Selecting the Function

1. Press **DSPY** until the window displays **VERSION NUMBER**.
2. Press ⇑ until the window displays STATUS MEMORY.
3. Press **SEL**.

Selecting a Display/Character

4. **A.** Press ⇑ to view the next character of the current output display or the first character of the next output display.

   B. Press ⇓ to view the previous character of the current output display or the last character in the previous output display.

   C. Press **PT** to select a specific output display number and character for viewing.
   The window prompts with ***DISPLAY=^***.
   - Enter the desired output display number (0 – 89/99) using the hex keypad and press **ENTR**.
     The window prompts with ***CHARACTER=^***.
   - Enter the desired character number (1 – 8) using the hex keypad and press **ENTR**.

Exiting the Function

5. Press **DSPY** or **CMD**.
   The window displays ***STATUS MEMORY***.

5.4.5 Com Status

The following describes how to view the communications status of incoming/outgoing alarm information. The function provides channel information to indicate:

- Transmission/reception of data
- Presence of frame, parity, overrun, or timeout errors

Menu: DSPY

Purpose: To view channel status for Channels 1 – 9 or 1 – 5, depending on hardware.

Screen Format: The following is the screen format for this function:

CH*xx aa bb c*

CH	Channel
xx	Channel Number (1 – 9)
aa	Transmit
bb	Receive
c	Frame, Parity, Overrun, or Timeout Error

Keys Used: The following keys are active during this function:

- ⇑**:** Advance to the next channel
- ⇓**:** Back to the previous channel
- **PT** (POINT)**:** Select a specific channel number
- **DATA:** Display total number of bytes
- **CLR** (CLEAR)**:** Return error count to zero

Valid Modes: Normal, Config

Operation: Use Procedure 5-5 to view the communication status of the serial channels.

Procedure 5-5 Viewing Communication Status

Step	Procedure

Selecting the Function

1. Press **DSPY** until the window displays **VERSION NUMBER**.
2. Press ⇑ until the window displays COM STATUS.
3. Press **SEL**.

Selecting a Channel

4. **A.** Press ⇑ to select the next channel or press ⇓ to go to the previous channel.

   B. Press **PT** to select a specific channel.
   The window prompts with ***CHANNEL=^***.
   - Enter the desired channel number (1 – 9) using the hex keypad and press **ENTR**.

Viewing Total Count

5. Press **DATA** to view total number of transmitted bytes.

6. Press **DATA** again to view the total number of received bytes.

7. Press **DATA** again to view the total number of parity errors.
   If the auto-parity function set up the host port, the window displays ***PARITY N/A***.

8. Press **DATA** again to view the total number of overrun errors.

9. Press **DATA** again to view the total number of frame errors.

10. Press **DATA** again to view the total number of timeout errors.

Resetting a Counter to Zero

11. Press **CLR** to return a count to zero.

Exiting the Function

12. Press **DSPY** or **CMD**.
    The window displays ***COM STATUS***.

5.4.6 Latching Control

The following describes how to operate latching commands for discrete control outputs on the WS2000.

Menu: DSPY

Purpose: To operate the discrete control outputs in latching mode or to send a latching control command over a data collection port to monitored equipment.

The WS2000 local discrete status inputs and control outputs map simultaneously. Status inputs are on points 1 – 32 or 1 – 64, depending on hardware. Control outputs are on points 1 – 8 or 1 – 16, depending on hardware.

Through option-strap settings on WS2000, 16 status input points can read the state of the 16 control outputs. When this strapping option is applied, status inputs 25 – 32 read the state of control points 1 – 8 and status inputs 57 – 64 read the state of control points 9 – 16.

Screen Format: The following is the screen format for this function:

DSP *xx PT yy*

DSP	Display
xx	Output Display Number (00 – 89/99)
PT	Point
yy	Control Output Point Number (1 – 64)

Keys Used: The following keys are active during this function:

- ⇑**:** Advance to the next control point
- ⇓**:** Back to the previous control point
- **PT** (POINT)**:** Select a specific control point number
- **ON:** Energize the currently selected control point
- **OFF:** De-energize the currently selected control point
- **HELP:** Display a brief help message

Valid Modes: Normal mode only

Operation: Use Procedure 5-6 to latch selected discrete control points on the WS2000.

Procedure 5-6 Latching Control Outputs

Step	Procedure

Selecting the Function

1. Press **DSPY** until the window displays **VERSION NUMBER**.
2. Press ⇑ until the window displays **LATCHING CONTROL**.
3. Press **SEL**.

Selecting a Control Point

4. **A.** Press ⇑ to select the next control point or press ⇓ to go to the previous control point.

   B. Press **PT** to select a specific control point.
   The window prompts with ***DISPLAY=^***.

   - Enter the desired output display number (00 – 89/99) using the hex keypad and press **ENTR**.
     The window prompts with ***POINT=^***.
   - Enter the desired control point number (1 – 64) using the hex keypad and press **ENTR**.

Operating the Selected Control Point

5. Press **ON** to energize the selected control point or press **OFF** to de-energize the control point.

Exiting the Function

6. Press **DSPY** or **CMD**.
   The window displays ***LATCHING CONTROL***.

5.4.7 Momentary Control

This section describes how to operate a momentary command for discrete control outputs on the WS2000.

Menu: DSPY

Purpose: To operate the discrete control outputs in momentary mode or to send a momentary control command over a data collection port to monitored equipment.

The WS2000 local discrete status inputs and control outputs map simultaneously. Status inputs are on points 1 – 32 or 1 – 64, depending on hardware. Control outputs are on points 1 – 8 or 1 – 16, depending on hardware.

Through option-strap settings on WS2000, 16 input points can read the state of the 16 control outputs. When this strapping option is applied, status inputs 25 – 32 read the state of control points 1 – 8 and status inputs 57 – 64 read the state of control points 9 – 16.

Screen Format: The following is the screen format for this function:

DSP ***xx*** **PT** ***yy zz***

DSP	Display
xx	Output Display Number (00 – 89/99)
PT	Point
yy	Control Output Point Number (1 – 64)
zz	Operating Indicator (On)

Note: The operating indicator is normally blank (Off).

Keys Used: The following keys are active during this function:

- ⇑**:** Advance to the next screen for the current display or the first point in the next display
- ⇓**:** Back to the previous point in the current display or the last point in the previous display
- **PT** (POINT)**:** Select a specific display/point number
- **ON:** Operate the currently selected point and briefly turn the operating indicator On

Valid Modes: Normal mode only

Operation: Use Procedure 5-7 to initiate momentary control commands on selected control points.

Procedure 5-7 Initiating Momentary Control Commands

Step	Procedure

Selecting the Function

1. Press **DSPY** until the window displays **`VERSION NUMBER`**.
2. Press ⇑ until the window displays MOMENTARY CNTRL.
3. Press **SEL**.

Selecting a Control Point

4. **A.** Press ⇑ to select the next control point or press ⇓ to go to the previous control point.

   B. Press **PT** to select a specific control point.
   The window prompts with ***`DISPLAY=^`***.

   - Enter the desired output display number (00 – 89/99) using the hex keypad and press **ENTR**.
     The window prompts with ***`POINT=^`***.
   - Enter the desired control point number (1 – 64) using the hex keypad and press **ENTR**.

Operating the Selected Control Point

5. Press **ON** to momentarily energize the selected control point.

Exiting the Function

6. Press **DSPY** or **CMD**.
   The window displays ***`MOMENTARY CNTRL`***.

5.4.8 Analog Inputs

This section describes how to view a selected analog input.

Menu: DSPY

Purpose: To display the currently selected analog input.

Screen Format: This function displays one of the following screen formats:

E*x* A*y*: *nnn*	Analog input is operational
E*x* A*y*: DISABLED	Analog input is not turned On
E*x*: NOT EQUIPPED	Analog board is not installed
x	Expander 0 (WS2000), 1, or 2
y	Analog Input (1 – 8)
nnn	Analog value in percent (Range: –100% through 100% full scale)

Keys Used: The following keys are active during this function:

- ⇑**:** Advance to the next analog input
- ⇓**:** Back to the previous analog input
- **PT** (POINT)**:** Select a specific analog input

Valid Modes: Normal mode only

Operation: Use Procedure 5-8 to view analog inputs.

Procedure 5-8 Viewing Analog Inputs

Step	Procedure

Selecting the Function

1. Press **DSPY** until the window displays **VERSION NUMBER**.
2. Press ⇑ until the window displays **ANALOG INPUTS**.
3. Press **SEL**.

Selecting an Analog Input

4. **A.** Press ⇑ to select the next analog input or press ⇓ to go to the previous analog input.

B. Press **PT** to select a specific analog input.
The window prompts with ***EXPANDER=^***.

- Enter the desired expander number (0 – 2) using the hex keypad and press **ENTR**.
  The window prompts with ***CHANNEL=^***.

  Note: 0 represents the WS2000 while 1 and 2 represent the first two discrete expanders.

- Enter the desired analog input number (0 – 7) using the hex keypad and press **ENTR**.

Exiting the Function

5. Press **DSPY** or **CMD**.
The window displays ***ANALOG INPUTS***.

5.4.9 Accumulator Inputs

This section describes how to view a selected accumulator input.

Menu: DSPY

Purpose: To display the currently selected accumulator input.

Screen Format: This function displays one of the following screen formats:

P*x* ON EQ	Accumulator input is operational
P*x* OFF *EQ*	Accumulator input is installed but disabled
P*x* OFF *NE*	Accumulator input is not installed (if turned On, this input reports as in a failed state)
P*x* yyyyyy *nnnnn*	Accumulator error counts
x	Pulse Accumulator Channel (0 – 7)
yyyyyy	ERRORD (Errored Seconds), DEGRAD (Degraded Seconds), SEVERE (Severely Errored Seconds), UNAVAL (Unavailable Seconds), TL (Total Errors)
nnnnn	Error Count

Keys Used: The following keys are active during this function:

- ⇑**:** Advance to the next analog input
- ⇓**:** Back to the previous analog input
- **PT** (POINT)**:** Select a specific analog input

Valid Modes: Normal mode only

Operation: Use Procedure 5-9 to view accumulator inputs.

Procedure 5-9 Viewing Accumulator Inputs

Step	Procedure

Selecting the Function

1. Press **DSPY** until the window displays **VERSION NUMBER**.
2. Press ⇑ until the window displays **ACCUM. INPUTS**.
3. Press **SEL**.

Selecting an Accumulator Input

4. **A.** Press ⇑ to go to the next screen of the current accumulator input/next accumulator or press ⇓ to go to the previous screen of the current accumulator/previous accumulator input.

   B. Press **PT** to select a specific accumulator input.
   The window prompts with ***CHANNEL=^***.

   - Enter the desired accumulator number (0 – 7) using the hex keypad and press **ENTR**.
     The window prompts with ***Px ON/OFF EQ/NE***.

5. Press ⇑ to cycle through errored, degraded, severely errored, unavailable, and total seconds counters.

Exiting the Function

6. Press **DSPY** or **CMD**.
   The window displays ***ACCUM. INPUTS***.

5.5 Command Functions

Figure 5-3 shows the Command functions and the function purpose.

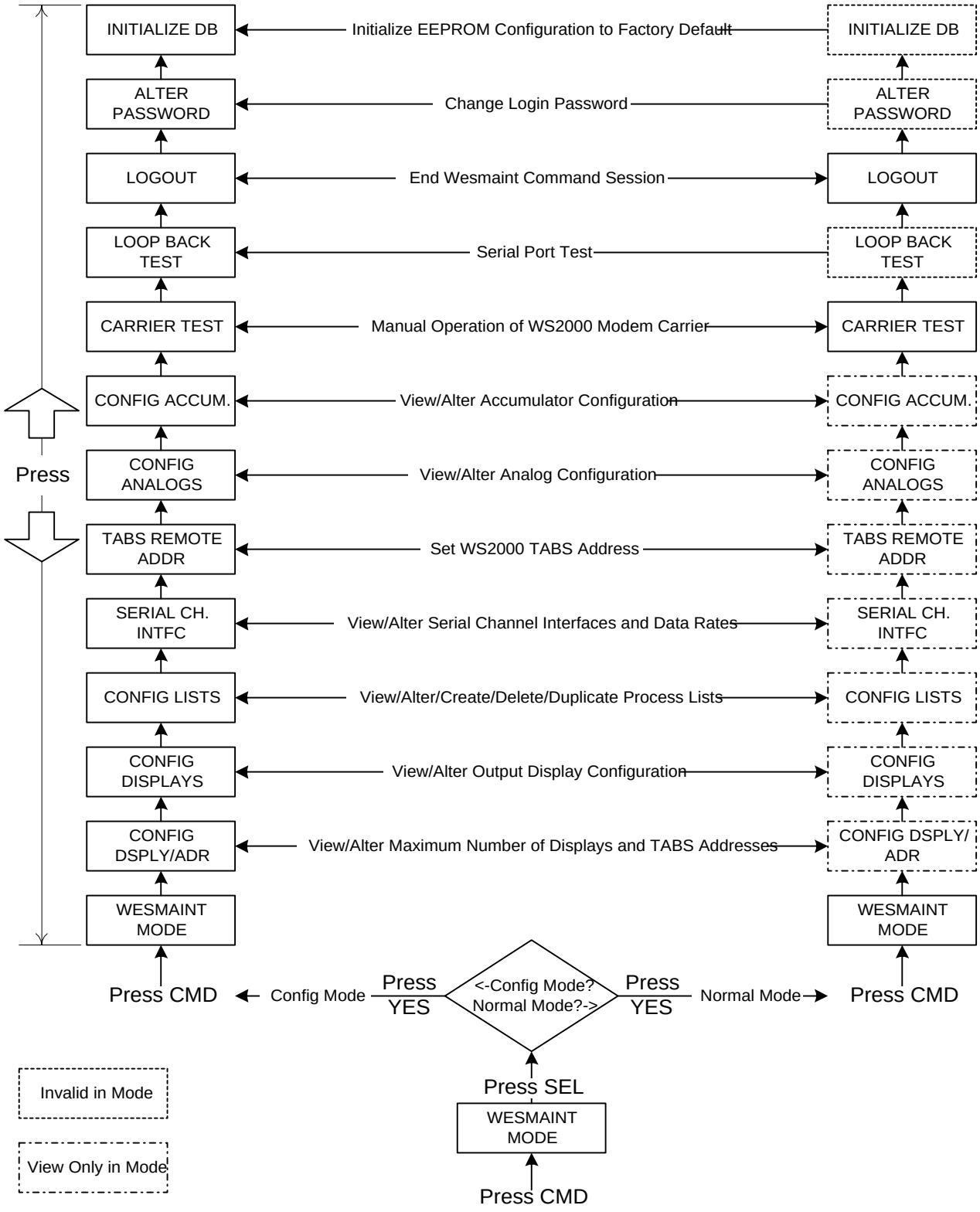

Figure 5-3 Command Functions

5.5.1 Wesmaint Mode

The following describes how to change the WS2000 from the configuration mode, used to change data, to the normal operation mode for processing information.

Menu: CMD

Purpose: To confirm or change the Wesmaint operating mode.

Note: Some command functions can operate in both Normal and Config mode while other command functions can operate in only one of the two operating modes. Each function description has a section labeled *Valid Modes* that identifies the valid mode or modes for that function.

Screen Format: Depending on the current operating mode, either of two prompts appears: **`NORMAL MODE?`** or **`CONFIG MODE?`**.

Keys Used: The following keys are active during this function:

- ⇑**:** Display the alternate operating mode
- ⇓**:** Return to the current operating mode
- **YES:** Select the alternate operating mode

Valid Modes: Normal, Config

Operation: Use Procedure 5-10 to alter the WS2000 operating mode.

Procedure 5-10 Changing Wesmaint Modes

Step	Procedure

Selecting the Function

1. Press **CMD** until the window displays **`WESMAINT MODE`**.

2. Press **SEL**.
   The window displays the current operating mode.

Changing to the Alternate Operating Mode

3. Press ⇑ to display the alternate operating mode. Observe the following:
   A. *If already in the Normal mode, the window prompts* ***`CONFIG MODE?`***.

   •Press **YES** to enter Config mode.
   The window briefly displays ***`STOPPING TASKS…`*** *to indicate that normal WS2000 functions are shutting down in preparation for the Config mode. Then,* ***`CONFIG MODE`*** *appears.*

B. *If already in the Config mode, the window prompts* ***NORMAL MODE?****.*

- Press **YES** to restart the WS2000 and resume normal operation.
  The window displays ***INITIALIZING*** *to indicate that normal WS2000 functions are restarting in preparation for normal operation. Then* ***WESMAINT READY*** *appears.*

Exiting the Function

4. Press **DSPY** or **CMD**.
   The window displays ***VERSION NUMBER*** *or* ***WESMAINT MODE****, respectively.*

5.5.2 Configure Displays and Addresses

The following describes how to set the maximum number of displays and addresses.

Menu: CMD

Purpose: To view or modify the maximum allowable number of displays and TABS addresses for mapping monitored down-stream network elements.

Screen Format: Either of two displays appears: **`100/32 DPLY/ADR`** or **`90/72 DPLY/ADR`**

The maximum number of displays and addresses is either 100 (00 – 99) addresses and 32 (00 – 31) displays or 90 (00 – 89) addresses and 72 (00 – 71) displays.

Note: Changing the maximum number of displays and addresses affects all Display or Command functions that handle output display viewing or configuration.

Keys Used: The following keys are active during this function:

- **YES:** Accept current values
- **NO:** Reject current values
- **DATA:** View current values

Valid Modes:

- Vie w Displays/Addresses — Normal mode, Config mode
- Mod ify Displays/Addresses — Config mode only

Operation: Use Procedure 5-11 to view or modify the maximum number of allowed displays and TABS addresses.

Procedure 5-11 Configuring the Maximum Number of Displays and Addresses

Step	Procedure

Selecting the Function

1. Press **CMD** until the window displays **`WESMAINT MODE`**.
2. Press ⇑ until the window displays **`CONFIG DSPLY/ADR`**.
3. Press **SEL**.
   The current maximum values appear.
4. Press **DATA** and **NO** to view the choices and press **YES** to select the desired values.

   Note 1: If you select 100/32 and the window prompts **`MUST REDUCE NUMBER OF CONFIGURED TABS ADDRESSES BEFORE INCREASING NUMBER OF DISPLAYS`**, the current database has more than 32 addresses. Remove a sufficient number of addresses to reduce the number to 32 or fewer addresses.

   Note 2: If you select 90/72 and the configuration has more than 90 configured displays, WS2000 ignores the displays above 90.

Exiting the Function

5. Press **DSPY** or **CMD**.
   *The window displays **`CONFIG DSPLY/ADR`***.

5.5.3 Configure Displays

The following describes how to configure the WS2000 output displays.

Menu: CMD

Purpose: To view or modify the output displays configuration.

Screen Format: Each display has three configurable components:

- Data Source
- Process List
- Scan List

WS2000 uses three separate screens to show this information.

5.5.3.1 Data Source

Data sources can be serial, discretes, or spare.

Serial

For output displays where data originates from a serial port, the source screen shows the following:

***xx pppp* CyDzzzzz**

xx	TABS Output Display Number (00 – 89/99)
pppp	TA*nn* for a TABS data source or TBOS for a TBOS data source; *nn* is the data source TABS address (0 – 31).
Cy	Serial Channel Number (2 – 5 or 2 – 9, depending on the hardware); Channels 6 – 9 are always TBOS.
Dzzzzz	Input Display Number: ■ TABS: 0 – 65535 ■ TBOS: 1– 8

See *Serial Port Connections* on Page 3-20 for the physical location of Channels 2 – 9 and *Serial Channel Interface* on Page 5-34 for changing a port protocol to TABS or TBOS.

Note: When a channel protocol changes, all displays mapped to that channel become spares.

Discretes

For output displays where data originates from discrete inputs, the source screen shows the discrete input expander address:

***xx* DISC Exyy**

xx	TABS Output Display Number (00 – 89/99)
DISC	Discrete
Ex	Expander; x is 0 (WS2000), 1, or 2.
yy	WPIB Address:

Expander	WPIB Address
0	00
1	08
2	10

Spare

If an output display is not configured (spare), the source screen shows the following:

xx **SPARE**

xx	TABS Output Display Number (00 – 89/99)

5.5.3.2 Process List

The process list screen shows the selected process list number for the output display:

xx **LIST** ***yyyy***

xx	Output Display Number (00 – 89/99)
LIST	Process List
yyyy	Process List Identifier Number

Note: Process list identifier 0000 indicates that no process list attributes have been selected and that the display points process as *status without memory*.

5.5.3.3 Scan List

The scan list screen indicates the valid characters in each display. WS2000 does not scan invalid characters, whose data bits are constantly held at 0. The scan list screen shows the numbers of the valid characters:

xx **SCAN** ***zzzzzzzz***

xx	Output Display Number (00 – 99)
SCAN	Scan List
zzzzzzzz	Valid Character Numbers (1 – 8): 1 2 3 4 5 6 7 8

Keys Used: The following keys are active during this function:

- ⇑**:** Advance to next screen for current output display or first screen of next output display
- ⇓**:** Back to previous screen for current output display or last screen of previous output display
- **PT** (POINT)**:** Select a specific output display
- **DATA:** Enter data entry mode

Valid Modes:

- View Output Display — Normal mode, Config mode
- Modify Output Display — Config mode only

Operation: Use Procedure 5-12 to configure an output display.

Procedure 5-12 Configuring an Output Display

Step	Procedure

Selecting the Function

1. Press **CMD** until the window displays **`WESMAINT MODE`**.
2. Press ⇑ until the window displays **`CONFIG DISPLAYS`**.
3. Press **SEL**.

Selecting a Screen or a Specific Output Display

4. **A.** Press ⇑ to advance to the next screen on the current output display or to the last screen on the previous output display.

   B. Press ⇓ to go to the previous screen on the current output display or to the last screen on the previous output display.

   C. Press **PT** to select a specific output display.
   The window prompts with ***`DISPLAY=^`***.
   - Enter the desired output display number (00 – 89/99) using the hex keypad and press **ENTR**.

Changing the Data Source for a Display

5. Select the desired output display using Step 4.
6. Press **DATA**.
   The window prompts with ***`CHANNEL=^`***.
7. **A.** If the data source is an input display collected on a TABS serial input, enter the channel number (2 – 5) using the hex keypad and press **ENTR**. Refer to *Serial Port Connections* on Page 3-20 for the physical location of channels 2 – 5.
   The window prompts with ***`TABS ADDR=^`***.
   - Input a TABS address (0 – 31) using the hex keypad and press **ENTR**.
     The window prompts with ***`DISPLAY=^`***.

- **Enter** the desired input display number (0 – 65535) using the hex keypad and press **ENTR**.

B. If the data source is an input display collected on a TBOS serial input, enter the channel number (2 – 9) using the hex keypad and press **ENTR**. Refer to *Serial Port Connections* on Page 3-20 for the physical location of channels 2 – 9.
The window prompts with ***DISPLAY=^***.

- Enter the desired input display number (1 – 8) using the hex keypad and press **ENTR**.

C. If the data source consists of discrete inputs, press **D** using the hex keypad and press **ENTR**.
The window prompts with ***EXPANDER=^***.

- Enter the expander number of the discrete inputs (see *Discretes* on Page 5-26) using the hex keypad and press **ENTR**.

D. To configure the display as a spare, press **0** using the hex keypad and press **ENTR** key. If a source already exists and you need to configure the output display as a spare, press **CLEAR**.

Changing the Process List

8. Use Step 4 to select the desired output display, then press ⇑ once to access the list screen (xx LIST yyyy).

9. Press **DATA**.
The window prompts with ***LIST=^***.

10. Enter the process list identifier code using the hex keypad and press **ENTR**.
If the WS2000 configuration does not contain the selected process list, the window briefly displays the message ***NO SUCH LIST*** *and prompts again for a list number.*

Note: To view, alter, create, duplicate, and delete process lists, use the Configure Lists function.

Changing the Scan List

11. Use Step 4 to select the desired output display, then press ⇑ twice to select the scan screen (xx SCAN zzzzzzzz).

12. Press **DATA**.
The window prompts with ***SCAN=^***.

13. **A.** Enter the numbers for the characters to be scanned using the hex keypad and press **ENTR**. For example, to scan characters 1, 2, and 8, enter 128.

    B. To disable scanning of all display characters, press **ENTR** only.

Exiting the Function

14. Press **DSPY** or **CMD**.
    The window displays ***CONFIG DISPLAYS****.*

5.5.4 Configure Process Attribute Lists

This section describes how to view, modify, create, duplicate, or delete WS2000 configuration Process Lists.

Menu: CMD

Purpose: To view or modify process list attributes. This function also allows you to create, delete, and duplicate process lists.

Screen Format: The following is the screen format for this function:

LST *xxxx yy aaaa*

LST	Process List
xxxx	Process List Identifier Number
yy	Point Number (1 – 64)
aaaa	Point Attributes

Point Attributes

Each point in a process list can have four attributes:

- **B** = bipolar alarm enable
- **A** = alarm enable
- **M** = change of state memory enable
- **I** = invert state

You can individually enable/disable these attributes for each point. If all attributes are disabled, the point processes as *status without memory* and displays as a blank space.

Keys Used: The following keys are active during this function:

- ⇑**:** Advance to the next point in the current list
- ⇓**:** Back to the previous point in the current list
- **PT** (POINT)**:** Select a list to view or modify

The following keys are active during the Modify function only:

- **RUN:** Enable bipolar attribute
- **STOP:** Disable bipolar attribute
- **ON:** Enable alarm attribute
- **OFF:** Disable alarm attribute
- **YES:** Enable memory attribute
- **NO:** Disable memory attribute
- **DATA:** Toggle invert attribute
- **CLR:** Clear all attributes
- **ENTR:** Store modified process list

Valid Modes:

■ View Process List	Normal mode, Config mode
■ Modify Process List	Config mode only
■ Create Process List	Config mode only
■ Duplicate Process List	Config mode only
■ Delete Process List	Config mode only

Operation: Use Procedure 5-13 to view, modify, create, duplicate, or delete a Process List identifier code.

Procedure 5-13 Configuring Process Attribute Lists

Step	Procedure

Selecting the Function

1. Press **CMD** until the window displays **`WESMAINT MODE`**.
2. Press ⇑ until the window displays **`CONFIG LISTS`**.
3. Press **SEL**.
   *The window displays **`VIEW LIST?`**.*
4. Press **NO** to cycle through the list options (**`VIEW LIST?`**, **`MODIFY LIST?`**, **`CREATE LIST?`**, **`DUPLICATE LIST?`**, **`DELETE LIST?`**) and press **YES** at the one you want to use.
   *The window prompts with **`LIST NUMBR=^`**.*
   *When you select the **`DUPLICATE LIST?`** option, the window prompts with **`DUP FROM=^.`***

5. **A.** If you selected **VIEW LIST?**, go to Step 6.

   B. If you selected **MODIFY LIST?**, go to Step 9.

   C. If you selected **CREATE LIST?**, go to Step 15.

   D. If you selected **DUPLICATE LIST?**, go to Step 16.

   E. If you selected **DELETE LIST?**, go to Step 18.

Viewing Process List Attributes

6. Enter the four-digit list identifier using the hex keypad and press **ENTR**.

7. Use ⇑ and ⇓ to view the point attributes in the list.

8. Press **PT** to select a different list for viewing and continue from Step 6.

Modifying List Attributes

9. Enter the four-digit list identifier using the hex keypad and press **ENTR**.
   The window prompts with ***AUTO PROPAGATE?****.*

10. Press **YES** to enable the Auto Propagate function or **NO** to disable it.

    Note: If you select the Auto Propagate function, any changes you make to the attributes of one point affect the attributes of all subsequent (higher) points in the list.

11. Use ⇑ and ⇓ to view the point attributes in the list.

12. Use **RUN**, **STOP**, **ON**, **OFF**, **YES**, **NO**, **DATA**, and **CLR** to modify the attributes of the point displayed in the window as follows:

Attribute	Press	
	To Select	To Deselect
Bipolar	**RUN**	**STOP**
Alarm	**ON**	**OFF**
Memory	**YES**	**NO**
Invert	**DATA**	**CLR** (clear all)

13. Press **ENTR** to store the modified attributes in WS2000 non-volatile memory.
The window prompts with ***STORE LIST?****.*

14. Press **YES** to store the list or **NO** to continue with modifications.

Note: Pressing **PT**, **SEL**, **DSPY**, or **CMD** before you store a modified list causes WS2000 to ignore all modifications.

Creating a New Process List

15. Enter the four-digit list identifier using the hex keypad and press **ENTR**.

A. *If the entered list number does not already exist, WS2000 creates a new list and automatically invokes the Modify List function.*

- Go to Step 9 and continue the procedure.

B. *If the entered list number already exists, the window briefly displays the message* ***LIST EXISTS NOW****, followed by the prompt* ***MODIFY LIST?****.*

- Press **YES** to modify the existing list and go to Step 9 or **NO** to select another operation.

C. *If the window displays* ***NO SPACE LEFT****, you must delete an existing list to make room for the new list. Go to Step 18 to delete an existing list. The window prompts with* ***DELETE LIST?****.*

Note: The WS2000 EEPROM has space for 100 process lists.

Duplicating a List

16. Enter the four-digit list identifier using the hex keypad and press **ENTR**.
The window prompts with ***DUP TO=^****. If the specified list does not exist, the window briefly displays* ***NO SUCH LIST****.*

17. Enter the list identifier to be assigned to the new list using the hex keypad and press **ENTR**.

A. *If the specified list already exists, the window diplays* ***LIST EXISTS NOW****, followed by the prompt* ***OVERWRITE?****.*

- Press **YES** to overwrite the existing list or **NO** to repeat Step 16.

B. *If the specified list does not exist already, WS2000 creates the list using attributes from the list specified in Step* 16*. The window prompts with* ***MODIFY LIST?****.*

- Press **YES** to modify the existing list and go to Step 9 or **NO** to select another operation.

C. *If the window displays* ***NO SPACE LEFT****, you must delete a list.*

- Press **CMD**.
  The window prompts with ***View List?****.*
- Press **NO** until the window prompts **DELETE LIST?**, then select **YES**.
  The window prompts with ***LIST NUMBR=^****.*
- Go to Step 18.

Deleting a Process List

18. Enter the four-digit list identifier using the hex keypad and press **ENTR**.

A. *If the entered list number exists, the window briefly displays* ***LIST DELETED****, followed by the prompt* ***VIEW LIST?****.*

B. *If the specified list does not exist, the window briefly displays* ***NO SUCH LIST****, then displays* ***LIST NUMBR=^****.*

- Repeat Step 18.

Exiting the Function

19. Press **DSPY** or **CMD**.
The window displays `CONFIG LISTS`*.*

5.5.5 Serial Channel Interface

This section describes how to set the electrical interface type and the data rate for the WS2000 serial ports.

Menu: CMD

Purpose: To view or modify data collection protocols, the electrical interface specification (RS-232/RS-485 or RS-422), or the data rate (1,200 bps or 2,400 bps) for the serial channels.

Screen Format: Each serial channel has three configurable components:

- Data Collection Protocol
- Electrical Interface
- Data Rate

5.5.5.1 Data Collection Protocol

The following is the data collection protocol screen format:

CH*x* = *pppp*

CH	Channel
x	Channel Number (1 – 9)
pppp	TABS or TBOS (Channel 1, Host, is TABS only and cannot be changed; data collection Channels 2 – 5 can be TABS/TBOS; data collection Channels 6 – 9 are TBOS only)

Note: When you change a channel protocol, all displays mapped to that channel become spares.

5.5.5.2 Electrical Interface

The following is the electrical interface screen format:

CH*x* = RS*eeee*

CH	Channel
x	Channel Number (1 – 9)
RS	Recommended Standard
eeee	232/485 or 422

5.5.5.3 Data Rate

The following is the data rate screen format:

CH*x* = *yyyy* BAUD

CH	Channel
x	Channel Number (1 – 9)
yyyy	1,200 or 2,400 bps
BAUD	Baud

Keys Used: The following keys are active during this function:

- ⇑**:** Advance to interface type or baud rate of current channel or to protocol type of next channel
- ⇓**:** Back to baud rate of previous channel or to previous display for this channel
- **PT** (POINT)**:** Select a new channel
- **DATA:** Enter data entry mode

Valid Modes:

- View Serial Channel Interface — Normal mode, Config mode
- Modify Serial Channel Interface — Config mode only

Operation: Use Procedure 5-14 to view or modify the serial channel interface and data rate for the WS2000 serial ports.

Procedure 5-14 Configuring the Serial Channel Interface

Step	Procedure

Selecting the Function

1. Press **CMD** until the window displays **`WESMAINT MODE`**.
2. Press ⇑ until the window displays **`SERIAL CH INTFC`**.
3. Press **SEL**.
   *After you press **SEL**, the window displays the current channel protocol type (Channel 1 – HOST).*

Viewing Serial Channel Configuration Data

4. **A.** Press ⇑ to display the current channel interface type.
   - Press ⇑ again to display the current channel baud rate.
   - Press ⇑ again to make the next channel the current channel and display its protocol type.

     Observe that the channel numbers automatically *wrap* from 9 to 1. ⇓ works similarly to ⇑. When you press ⇓, you access the previous display for the current channel or the last display (Baud rate) for the previous channel. When you are at Channel 1 and press ⇓ , the display wraps around to Channel 9. Similarly, when you are at Channel 9 and press ⇑ , the display wraps to Channel 1.
   - Press ⇑ again to display the new current channel interface type.
   - Press ⇑ again to display the new current channel baud rate.
   - Repeat Step A to display the protocol type, interface type, and data rate parameters for the other channels.

B. Press **PT** to select a specific channel.
The window prompts with ***CHANNEL=^***.

- Enter the desired channel number 1 – 9 using the hex keypad and press **ENTR**. Continue pressing ⇑ to view the selected channel data rate.

Changing Protocol Type

5. Select the desired channel using Step 4. Verify that the protocol type displays.

6. Press **DATA**.
The window prompts with ***TABS?*** *or* ***TBOS?*** *if the channel is 2, 3, 4, or 5; if the channel is 6 – 9, a message appears indicating this channel cannot be changed.*

7. **A.** Press **YES** to select the new protocol (TABS or TBOS).

Note: You cannot change the protocol types on Channels 1 and 6 – 9.

B. Press **NO** to return to the original protocol.
The window prompts with the original protocol.

Note: Successive **NO** inputs toggle between the **TABS?** and **TB0S?** prompts.

- Press **YES** to select the original protocol type.

Changing Interface Type

8. Select the desired channel using Step 4. Verify that the interface type displays.

9. Press **DATA**.
The window prompts with ***RS-232/485?***.

10. Press **YES** to select the RS-232/RS-485 interface. Otherwise, press **NO**.
The window prompts with ***RS-422?***.

11. Press **YES** to select the RS-422 interface or **NO** to redisplay the RS-232/485 prompt.

Note: You cannot change Channels 6 – 9 to the RS-232/485 interface.

Changing the Baud Rate

12. Select the desired channel using Step 4. Verify that the data rate displays.

13. Press **DATA**.
The window prompts with ***1200 BAUD?***.

14. **A.** Press **YES** to select 1200 Baud. Otherwise, press **NO**.
The window prompts ***2400 BAUD?***.

B. Press **YES** to select 2400 Baud or **NO** to display the ***1200*** **BAUD** prompt.

Exiting the Function

15. Press **DSPY** or **CMD**.
The window displays ***SERIAL CH INTFC***.

5.5.6 TABS Remote Address

Menu: CMD

Purpose: To set the WS2000 TABS address.

Screen Format: The following is the screen format for this function:

TABS ADDR = ***nn***

nn	TABS address (0 – 31/255); 32 – 255 is extended TABS addressing

Keys Used: The following keys are active during this function:

- **ENTR:** Exit data entry mode
- **DATA:** Enter data entry mode

Valid Modes:

- View TABS Address Normal mode, Config mode
- Modify TABS Address Config mode only

Operation: Use Procedure 5-15 to view or change the TABS address.

Procedure 5-15 Configuring the WS2000 TABS Address

Step	Procedure

Selecting the Function

1. Press **CMD** until the window displays **WESMAINT MODE**.

2. Press ⇑ until the window displays **TABS REMOTE ADDR**.

3. Press **SEL**.

Modifying the TABS Address

4. Press **DATA** to change the TABS address.
   *The **TABS ADDR=^** prompt appears.*

5. Enter a TABS address (0 to 31/255) using the hex keypad and press **ENTR**.
   The new TABS address displays.

Exiting the Function

6. Press **DSPY** or **CMD**.
   *The window displays **TABS REMOTE ADDR**.*

5.5.7 Configure Analogs

Menu: CMD

Purpose: To view or modify the currently selected analog configuration.

Screen Format: The following is the screen format for this function:

E*x* A*y*: *zz nnn* NE

E*x* A*y*: *zz nnn* EQ

E*x*	Expander; x is 0, 1, or 2.
A*y*	Analog input (0 – 7)
zz	Deadband window size (0% – 99%)
nnn	On/Off (analog collection is On or Off)
NE	Not Equipped (board not in system)
EQ	Equipped (board installed in system)

The deadband window size sets the detection sensitivity to analog changes. The sensitivity determines when the analog data report to a polling host.

Keys Used: The following keys are active during this function:

- ⇑**:** Advance to next analog input
- ⇓**:** Back to previous analog input
- **PT** (POINT)**:** Select a new analog and expander
- **DATA:** Change deadband window size

- **ON:** Turn analog scanning On
- **OFF:** Turn analog scanning Off

Valid Modes:

- View Analog Inputs Normal mode, Config mode
- Modify Analog Inputs Config mode only

Operation: Use Procedure 5-16 to view or alter the analog configuration.

Procedure 5-16 Configuring Analog Inputs

Step	Procedure

Selecting the Function

1. Press **CMD** until the window displays **WESMAINT MODE**.
2. Press ⇑ until the window displays **CONFIG ANALOGS**.
3. Press **SEL**.

Selecting an Analog Input

4. **A.** Press ⇑ to select the next analog or press ⇓ to go to the previous analog.

   B. Press **PT** to select a specific analog.
   The window prompts with ***EXPANDER=^***.

   - Enter the desired expander number (0 – 2) using the hex keypad and press **ENTR**.
     The window prompts with ***CHANNEL=^***.

     Note: 0 represents the WS2000 while 1 and 2 represent the first two discrete expanders.

   - Enter the desired analog input number (0 – 7) using the hex keypad and press **ENTR**.

Turning Analog Scanning On and Off

5. **A.** To enable analog input scanning, press **ON**.
   The window displays ***ON****. WS2000 scans and reports the analog when in Normal mode.*

   B. To disable analog input scanning, press **OFF**.
   The window displays ***OFF****. WS2000 does not scan the analog.*

Note: If you turn On an analog that is not equipped, the analog reports to a polling master as being in a failed state.

Changing the Deadband Window Size

6. To change the deadband size, press **DATA**.
   The window prompts with ***ANALOG WIND=^***.

7. Enter the size of the deadband window (0% – 99%) and press **ENTR**.
   The window displays the new deadband window size.

Exiting the Function

8. Press **DSPY** or **CMD**.
   The window displays ***CONFIG ANALOGS***.

5.5.8 Configure Accumulators

Menu: CMD

Purpose: To view or modify the currently selected accumulator configuration.

Screen Format: The following is the screen format for this function:

```
Px zz EQ
Px zz EQ
Px OFF NE
Px yyyyyy nnnnn
```

Px	Pulse Accumulator; x is input 0 – 7
zz	Scanning enabled (ON)/disabled (OFF)
OFF	Scanning disabled
EQ	Equipped (board installed in system)
NE	Not Equipped (board not in system)
yyyyyy	ERRORD (errored seconds threshold) DEGRAD (degraded seconds threshold) SEVERE (severely degraded seconds threshold)

nnnnn Errors per second threshold setting:

Errored seconds threshold (0 – 64998)
Degraded seconds threshold (1 – 64999)
Severely degraded seconds threshold (2 – 65000)

Severe > Degraded > Errored

Default values: 100 > 10 > 1, respectively

Keys Used: The following keys are active during this function:

- ⇑**:** Advance to next accumulator input or screen of current input
- ⇓**:** Back to previous accumulator input or screen of current input
- **PT** (POINT)**:** Select a specific accumulator input
- **DATA:** Change threshold level
- **ON:** Turn accumulator scanning On
- **OFF:** Turn accumulator scanning Off

Valid Modes:

- View Accumulator Inputs — Normal mode, Config mode
- Modify Accumulator Inputs — Config mode only

Operation: Use Procedure 5-17 to view or alter the accumulator configuration.

Procedure 5-17 Configuring Accumulator Inputs

Step	Procedure

Selecting the Function

1. Press **CMD** until the window displays **`WESMAINT MODE`**.
2. Press ⇑ until the window displays **`CONFIG ACCUM.`**.
3. Press **SEL**.

Selecting an Accumulator Input or Error Threshold

4. **A.** Press ⇑ to select the next accumulator input or press ⇓ to go to the previous accumulator input.
   When going up, successive presses move through the ***`ON/OFF`*** *display to the threshold displays (****`ERRORD`****,* ***`DEGRAD`****, and* ***`SEVERE`****), then proceed with the next accumulator input. Input 7 wraps to Input 1 when going up; Input 1 wraps to Input 7 when going down.*

B. Press **PT** to select a specific accumulator.
The window prompts with ***CHANNEL=^***.

- Enter the desired input number (0 – 7) using the hex keypad and press **ENTR**.
  The window prompts with ***Px ON/OFF EQ/NE***.

Turning Accumulator Scanning On and Off

5. A. To enable accumulator input scanning, press **ON**.
The window displays ***ON****. WS2000 scans and reports the accumulator when in Normal mode.*

B. To disable accumulator input scanning, press **OFF**.
The window displays ***OFF****. WS2000 does not scan the accumulator.*

Note: If you turn On an accumulator that is not equipped, the accumulator reports to a polling master as being in a failed state.

Changing the Deadband Window Size

6. Press ⇑ or ⇓ to select the desired threshold screen.

7. To change the threshold level, press **DATA**.
The window prompts with ***THRESHOLD=^***.

8. Enter the threshold level using the hex keypad and press **ENTR**.
The window displays the new threshold level. If the level is not within the range for that threshold/does not conform to the relationship errored < degraded < severe, the window displays ***INVALID INPUT***.

Exiting the Function

9. Press **DSPY** or **CMD**.
The window displays ***CONFIG ACCUM.***.

5.5.9 Carrier Test

This section describes how to perform a carrier test on the WS2000 host port.

Menu: CMD

Purpose: To manually operate the WS2000 carrier signal for testing purposes.

Screen Format: This function has two screen formats: **`CARRIER ON`** or **`CARRIER OFF`**.

Keys Used: The following keys are active during this function:

- **ON:** Manually turn carrier on
- **OFF:** Return to normal operation

Valid Modes: Normal, Config

Operation: Use Procedure 5-18 to perform the Carrier Test function on the WS2000 host port.

Procedure 5-18 Performing the Carrier Test

Step	Procedure

Selecting the Function

1. Press **CMD** until the window displays **`WESMAINT MODE`**.
2. Press ⇑ until the window displays **`CARRIER TEST`**.
3. Press **SEL**.

Modifying the Carrier Status

4. Press **ON** to force the carrier On.
5. Press **OFF** to force the carrier Off (return to normal operation).

Exiting the Function

6. Press **DSPY** or **CMD**.
   *The window displays **`CARRIER TEST`**.*

5.5.10 Loopback Test

The following describes how to do a loopback test on the input serial ports of the WS2000.

Menu: CMD

Purpose: To perform diagnostics on the serial ports. A serial port transmits a set of bytes and expects to receive the data back on the same serial port. Table 5-4 lists pinout information for wiring the loopback connectors.

Note: The serial interface configuration (see Procedure 5-14) determines which loopback connector to use (RS-232/RS-422) on each port.

Table 5-4 Pinout Wiring for the RS-422 and RS-232 Loopback Connectors

Pin	**RS-422** (Note 1)	**RS-232** (Note 2)
1	Not Used	Tx
2	Not Used	RTS
3	Not Used	CTS
4	Com	Com
5	Rx–	Rx
6	Rx+	DCD
7	Tx–	Not Used
8	Tx+	Not Used

Note 1: Jumper Pin 5 to Pin 7 and Pin 6 to Pin 8 to loop an RS-422 connection back.

Note 2: Jumper Pin 1 to Pin 5 and Pins 2 and 3 to Pin 6 to loop an RS-232 connection back.

Screen Format: The following is the screen format for this function:

CH*xx* P*x* F*x*

CH	Channel
xx	Channel number (1 – 9)
P*x*	Pass *x* number of times
F*x*	Fail *x* number of times

Keys Used: The following keys are active during this function:

- ⇑**:** Advance to next channel
- ⇓**:** Back to previous channel
- **ON:** Press to start the test
- **OFF:** Press to stop the test
- **CLR** (CLEAR)**:** Resets the pass and fail counters

Valid Modes: Config only

Operation: After connecting the appropriate pins for the serial port, use Procedure 5-19 to perform the loopback test.

Procedure 5-19 Performing the Loopback Test

Step	Procedure

Selecting the Function

1. Press **CMD** until the window displays **`WESMAINT MODE`**.
2. Press ⇑ until the window displays **`LOOP BACK TEST`**.
3. Press **SEL**.

Selecting Channels

4. **A.** Press ⇑ to go to the next channel or press ⇓ to go to the previous channel.

   B. Press **PT** to select a specific channel.
   The window prompts with ***`CHANNEL=^`***.
   - Enter the desired channel number using the hex keypad and press **ENTR**.

Running the Loopback Test

5. Connect the appropriate loopback connector to the serial channel.
6. Press **ON** to start the test.
   Either the pass or fail count increments.
7. Pressing **CLR** resets the pass and fail counts to 0 without stopping the test.
8. Press **OFF** to turn the test Off. You can also turn the test Off by pressing ⇑ or ⇓ or by changing the function.

Exiting the Function

9. Press **DSPY** or **CMD**.
   The window displays ***`LOOP BACK TEST`***.

5.5.11 Logout

This section describes how to log out of WS2000 when a password is used to log in. When security is required, you must use the Logout command. After you select this function, WS2000 automatically performs Logout.

Note: WS2000 does not execute an automatic logout if you unplug the Wesmaint unit or hang up the phone when connected through a modem.

Menu: CMD

Purpose: To end a command session. You cannot select any new commands until you supply a password. Also see *Alter Password* on Page 5-47.

Screen Format: When you select this function, the Wesmaint window displays the following message: **`LOGOUT COMPLETE`**.

Keys Used: No keys are active when you select this function because WS2000 automatically performs Logout.

Valid Modes: Normal, Config

Operation: Use Procedure 5-20 to log out of WS2000 when a password is used to log in.

Procedure 5-20 Logging Out

Step	Procedure

Selecting the Function

1. Press **CMD** until the window displays **`WESMAINT MODE`**.
2. Press ⇑ until the window displays **`LOGOUT`**.
3. Press **SEL**.
   *The window displays **`LOGGING OUT`**, then **`LOGOUT COMPLETE`**.*

Selecting Another Command

4. Press **DSP** or **CMD**.
   *The window displays **`LOGOUT`**.*

5.5.12 Alter Password

The following explains how to enable, disable, and change a password on the WS2000.

Notes:

- When passwords are enabled and WS2000 goes through a reset sequence, such as cycling unit power Off/On, WS2000 requires you to log in.
- When passwords are enabled, WS2000 does not allow commands to execute until the password is entered. Password

prompting occurs automatically after a Logout command executes.

- Password `0000` disables the password function. Any other password value enables the password function. While the password function is disabled, WS2000 does not request a password when powered up; thus, the LOGOFF command has no effect.

Menu: CMD

Purpose: To change the password stored in the serial EEPROM. This function also disables or enables the password function.

Screen Format: When you select this function, the screen displays: **PASSWORD=^**.

Keys Used: Use any of the keys in the hex keypad to enter a four-digit password and press **ENTR** to store a new password. If you make a mistake while keying in the password, press **CLR**.

Valid Modes: Config only

Operation: Use Procedure 5-21 to alter the WS2000 password. Enter Wesmaint using the old password, then change the password.

Procedure 5-21 Altering the Password

Step	Procedure

Selecting the Function

1. Press CMD until the window displays WESMAINT MODE.
2. Press ⇑ until the window displays **ALTER PASSWORD**.
3. Press **SEL**.
   *The window prompts **PASSWORD=^**.*
4. Respond to the prompt with a four-digit number using the hex keypad (**0** – **9**, **A**– **E**).
5. Reenter the same four-digit number after the **CONFIRM** prompt appears.
   *If the two passwords are different, the window displays **NOT CHANGED!**. This message indicates that the old password remains in effect.*

   *If the two passwords match, the window displays **CHANGED!**. This message indicates that WS2000 has stored the password in the serial EEPROM. After a brief pause, the window displays **ALTER PASSWORD**.*

6. To change the password, repeat Steps 3 through 5 using the new password.

Exiting the Function

7. Press **DSPY** or **CMD**.
The window displays ***ALTER PASSWORD***.

5.5.13 Initialize DB

This section describes steps required to initialize the WS2000 database function, which returns the WS2000 data configuration to the factory defaults.

Note: Before making changes to the configuration, go to Normal mode (see *Wesmaint Mode* on Page 5-22) to verify unit initialization. Return to the Config mode to insert new configurations.

Menu: CMD

Purpose: To return the EEPROM data configuration to the factory defaults.

Screen Format: The following message displays: **INITIALIZE DB**.

Valid Modes: Config only

Operation: Use Procedure 5-22 to initialize the database.

Procedure 5-22 Initializing the Database

Step	Procedure

Selecting the Function

1. Press **CMD** until the window displays **WESMAINT MODE**.

2. Press ⇑ until the window displays **INITIALIZE DB**.

3. Press **SEL**.
The window prompts ***ARE YOU SURE?***.

4. Press **YES** or **NO**.
If you select ***YES****, the window displays* ***WRITING…****. This can take from 1 to 30 seconds. Then the window displays* ***INITIALIZE DB***.

Exiting the Function

5. Press **DSPY** or **CMD**.

The window displays ***VERSION NUMBER*** *or* ***WESMAINT MODE****, respectively.*

Appendix A Default Data/Configuration Templates

This appendix includes default configuration data and configuration templates as follows:

- Default Serial Channel Information (Table A-1)
- Serial Channel Configuration Template (Table A-2)
- Display Configuration Template (Table A-3)
- Predefined Process Lists (Table A-4)
- Process List Configuration Template (Table A-5)

  Copy this table as often as needed to develop your process lists.
- Default Analog Information (Table A-6)
- Analog Configuration Template (Table A-7)
- Default Accumulator Information (Table A-8)
- Accumulator Configuration Template (Table A-9)

Table A-1 Default Serial Channel Information

Channel	Protocol	Interface Type	Data Rate (BPS)
1	Host TABS	RS-232/RS-485*	1200, 2400*
2	TABS, TBOS*	RS-232/RS-485, RS-422*	1200, 2400*
3	TABS, TBOS*	RS-232/RS-485, RS-422*	1200, 2400*
4	TABS, TBOS*	RS-232/RS-485, RS-422*	1200, 2400*
5	TABS, TBOS*	RS-232/RS-485, RS-422*	1200, 2400*
6	TBOS	RS-422	1200, 2400*
7	TBOS	RS-422	1200, 2400*
8	TBOS	RS-422	1200, 2400*
9	TBOS	RS-422	1200, 2400*

* Default

Table A-2 Serial Channel Configuration Template

Channel	Protocol	Interface Type	Data Rate (BPS)
1	Host TABS	RS-232/RS-485	
2			
3			
4			
5			
6	TBOS	RS-422	
7	TBOS	RS-422	
8	TBOS	RS-422	
9	TBOS	RS-422	

When mapping occurs on an output display, the display is assigned to:

- A specific input display on one of the serial channels
- A specific group of 64 discrete inputs on the main board or on one of the expander units

Note: All displays are unmapped and default to Process List #0001. All characters are scanned.

When a configuration uses a serial TBOS port, that port can support a maximum of eight displays of information (1 – 8).

When mapping occurs on an input display, the scan points and control points associated with that display have identical mapping. That is, to map the scan points for a particular display separately from the control points is not possible.

Table A-3 Output Display Configuration Template

Output Display	Input Display Data Source (Select Serial Channel or Discretes)					Process List (Default 0001)	Scanned Characters
	Serial Channel 2 – 9				Discretes		
	Chan No	TBOS/TABS	TABS Add	In Display	WIPB Add		
0							1 2 3 4 5 6 7 8
1							1 2 3 4 5 6 7 8
2							1 2 3 4 5 6 7 8
3							1 2 3 4 5 6 7 8
4							1 2 3 4 5 6 7 8
5							1 2 3 4 5 6 7 8
6							1 2 3 4 5 6 7 8
7							1 2 3 4 5 6 7 8
8							1 2 3 4 5 6 7 8
9							1 2 3 4 5 6 7 8
10							1 2 3 4 5 6 7 8
11							1 2 3 4 5 6 7 8
12							1 2 3 4 5 6 7 8
13							1 2 3 4 5 6 7 8
14							1 2 3 4 5 6 7 8
15							1 2 3 4 5 6 7 8
16							1 2 3 4 5 6 7 8
17							1 2 3 4 5 6 7 8
18							1 2 3 4 5 6 7 8
19							1 2 3 4 5 6 7 8
20							1 2 3 4 5 6 7 8
21							1 2 3 4 5 6 7 8
22							1 2 3 4 5 6 7 8
23							1 2 3 4 5 6 7 8
24							1 2 3 4 5 6 7 8
25							1 2 3 4 5 6 7 8
26							1 2 3 4 5 6 7 8
27							1 2 3 4 5 6 7 8
28							1 2 3 4 5 6 7 8
29							1 2 3 4 5 6 7 8
30							1 2 3 4 5 6 7 8

Table A-3 Output Display Configuration Template

Output Display	Input Display Data Source (Select Serial Channel or Discretes)					Process List (Default 0001)	Scanned Characters
	Serial Channel 2 – 9				Discretes		
	Chan No	TBOS/TABS	TABS Add	In Display	WIPB Add		
31							1 2 3 4 5 6 7 8
32							1 2 3 4 5 6 7 8
33							1 2 3 4 5 6 7 8
34							1 2 3 4 5 6 7 8
35							1 2 3 4 5 6 7 8
36							1 2 3 4 5 6 7 8
37							1 2 3 4 5 6 7 8
38							1 2 3 4 5 6 7 8
39							1 2 3 4 5 6 7 8
40							1 2 3 4 5 6 7 8
41							1 2 3 4 5 6 7 8
42							1 2 3 4 5 6 7 8
43							1 2 3 4 5 6 7 8
44							1 2 3 4 5 6 7 8
45							1 2 3 4 5 6 7 8
46							1 2 3 4 5 6 7 8
47							1 2 3 4 5 6 7 8
48							1 2 3 4 5 6 7 8
49							1 2 3 4 5 6 7 8
50							1 2 3 4 5 6 7 8
51							1 2 3 4 5 6 7 8
52							1 2 3 4 5 6 7 8
53							1 2 3 4 5 6 7 8
54							1 2 3 4 5 6 7 8
55							1 2 3 4 5 6 7 8
56							1 2 3 4 5 6 7 8
57							1 2 3 4 5 6 7 8
58							1 2 3 4 5 6 7 8
59							1 2 3 4 5 6 7 8
60							1 2 3 4 5 6 7 8
61							1 2 3 4 5 6 7 8

Table A-3 Output Display Configuration Template

Output Display	Input Display Data Source (Select Serial Channel or Discretes)					Process List (Default 0001)	Scanned Characters
	Serial Channel 2 – 9				Discretes		
	Chan No	TBOS/TABS	TABS Add	In Display	WIPB Add		
62							1 2 3 4 5 6 7 8
63							1 2 3 4 5 6 7 8
64							1 2 3 4 5 6 7 8
65							1 2 3 4 5 6 7 8
66							1 2 3 4 5 6 7 8
67							1 2 3 4 5 6 7 8
68							1 2 3 4 5 6 7 8
69							1 2 3 4 5 6 7 8
70							1 2 3 4 5 6 7 8
71							1 2 3 4 5 6 7 8
72							1 2 3 4 5 6 7 8
73							1 2 3 4 5 6 7 8
74							1 2 3 4 5 6 7 8
75							1 2 3 4 5 6 7 8
76							1 2 3 4 5 6 7 8
77							1 2 3 4 5 6 7 8
78							1 2 3 4 5 6 7 8
79							1 2 3 4 5 6 7 8
80							1 2 3 4 5 6 7 8
81							1 2 3 4 5 6 7 8
82							1 2 3 4 5 6 7 8
83							1 2 3 4 5 6 7 8
84							1 2 3 4 5 6 7 8
85							1 2 3 4 5 6 7 8
86							1 2 3 4 5 6 7 8
87							1 2 3 4 5 6 7 8
88							1 2 3 4 5 6 7 8
89							1 2 3 4 5 6 7 8
90							1 2 3 4 5 6 7 8
91							1 2 3 4 5 6 7 8
92							1 2 3 4 5 6 7 8

Table A-3 Output Display Configuration Template

Output Display	Input Display Data Source (Select Serial Channel or Discretes)					Process List (Default 0001)	Scanned Characters
	Serial Channel 2 – 9				Discretes		
	Chan No	TBOS/TABS	TABS Add	In Display	WIPB Add		
93							1 2 3 4 5 6 7 8
94							1 2 3 4 5 6 7 8
95							1 2 3 4 5 6 7 8
96							1 2 3 4 5 6 7 8
97							1 2 3 4 5 6 7 8
98							1 2 3 4 5 6 7 8
99							1 2 3 4 5 6 7 8

Table A-4 Predefined Process Lists

List	Points	Attributes
0001	1 – 64	BAM
118A	1 – 64	AM
119A	1 – 48	AM
	49 – 64	A
120A	1 – 32	AM
	33 – 64	A
121A	1 – 16	AM
	17 – 64	A
122A	1 – 64	A
123A	1 – 48	AM
124A	1 – 36	AM
	37 – 48	A
125A	1 – 24	AM
	25 – 48	A
126A	1 – 12	AM
	13 – 48	A
127A	1 – 48	A
128A	1 – 32	AM
129A	1 – 24	AM
	25 – 32	A
130A	1 – 16	AM
	17 – 32	A
131A	1 – 8	AM
	9 – 32	A
132A	1 – 32	A
133A	1 – 16	AM
134A	1 – 12	AM
	13 – 16	A
135A	1 – 8	AM
	9 – 16	A
136A	1 – 4	AM
	5 – 16	A
137A	1 – 16	A
138A	1 – 64	STATUS

List	Points	Attributes
139A	1 – 16	BA
140A	1 – 32	BA
141A	1 – 48	BA
0118	1 – 63	AM
	64	BA
0119	1 – 48	AM
	49 – 63	A
	64	BA
0120	1 - 32	AM
	33 – 63	A
	64	BA
0121	1 – 16	AM
	17 – 63	A
	64	BA
0122	1 – 63	A
	64	BA
0123	1 – 48	AM
	64	BA
0124	1 – 36	AM
	37 – 48	A
	64	BA
0125	1 – 24	AM
	25 – 48	A
	64	BA
0126	1 – 12	AM
	13 – 48	A
	64	BA
0127	1 – 48	A
	64	BA
0128	1 – 32	AM
	64	BA
0129	1 – 24	AM
	25 – 32	A
	64	BA

List	Points	Attributes
0130	1 – 16	AM
	17 – 32	A
	64	BA
0131	1 – 8	AM
	9 – 32	A
	64	BA
0132	1 – 32	A
	64	BA
0133	1 – 16	AM
	64	BA
0134	1 – 12	AM
	13 – 16	A
	64	BA
0135	1 – 8	AM
	9 – 16	A
	64	BA
0136	1 – 4	AM
	5 – 16	A
	64	BA
0137	1 – 16	A
	64	BA
0138	64	BA
0139	1 – 16, 64	BA
0140	1 – 32, 64	BA
0141	1 – 48, 64	BA
9999	9 – 16	M
	17 – 24	AM
	25 – 32	BAM
	33 – 40	I
	41 – 48	IM
	49 – 56	AMI
	57 – 64	BAMI
B = Bipolar, A = Alarm		
M = Memory, I = Invert		

Table A-5 Process List Configuration Template

List _____				List _____			
Point	**Attributes**	**Point**	**Attributes**	**Point**	**Attributes**	**Point**	**Attributes**
1		**33**		**1**		**33**	
2		**34**		**2**		**34**	
3		**35**		**3**		**35**	
4		**36**		**4**		**36**	
5		**37**		**5**		**37**	
6		**38**		**6**		**38**	
7		**39**		**7**		**39**	
8		**40**		**8**		**40**	
9		**41**		**9**		**41**	
10		**42**		**10**		**42**	
11		**43**		**11**		**43**	
12		**44**		**12**		**44**	
13		**45**		**13**		**45**	
14		**46**		**14**		**46**	
15		**47**		**15**		**47**	
16		**48**		**16**		**48**	
17		**49**		**17**		**49**	
18		**50**		**18**		**50**	
19		**51**		**19**		**51**	
20		**52**		**20**		**52**	
21		**53**		**21**		**53**	
22		**54**		**22**		**54**	
23		**55**		**23**		**55**	
24		**56**		**24**		**56**	
25		**57**		**25**		**57**	
26		**58**		**26**		**58**	
27		**59**		**27**		**59**	
28		**60**		**28**		**60**	
29		**61**		**29**		**61**	
30		**62**		**30**		**62**	
31		**63**		**31**		**63**	
32		**64**		**32**		**64**	

B = Bipolar A = Alarm M = Memory I = Invert

Table A-6 Default Analog Information

Analog Card Expander	Analog Channel	Deadband Window	Analog Channel Scanning
E0 (WS2000)	A0	02	OFF
	A1	02	OFF
	A2	02	OFF
	A3	02	OFF
	A4	02	OFF
	A5	02	OFF
	A6	02	OFF
	A7	02	OFF
E1	A0	02	OFF
	A1	02	OFF
	A2	02	OFF
	A3	02	OFF
	A4	02	OFF
	A5	02	OFF
	A6	02	OFF
	A7	02	OFF
E2	A0	02	OFF
	A1	02	OFF
	A2	02	OFF
	A3	02	OFF
	A4	02	OFF
	A5	02	OFF
	A6	02	OFF
	A7	02	OFF

Table A-7 Analog Configuration Template

Analog Card Expander	Analog Channel	Deadband Window	Analog Channel Scanning
E0 (WS2000)	A0		
	A1		
	A2		
	A3		
	A4		
	A5		
	A6		
	A7		
E1	A0		
	A1		
	A2		
	A3		
	A4		
	A5		
	A6		
	A7		
E2	A0		
	A1		
	A2		
	A3		
	A4		
	A5		
	A6		
	A7		

Table A-8 Default Accumulator Information

Accumulator Input	Accumulator Channel Scanning	Threshold	Threshold Level
0	OFF	ERRORD	1
		DEGRAD	10
		SEVERE	100
1	OFF	ERRORD	1
		DEGRAD	10
		SEVERE	100
2	OFF	ERRORD	1
		DEGRAD	10
		SEVERE	100
3	OFF	ERRORD	1
		DEGRAD	10
		SEVERE	100
4	OFF	ERRORD	1
		DEGRAD	10
		SEVERE	100
5	OFF	ERRORD	1
		DEGRAD	10
		SEVERE	100
6	OFF	ERRORD	1
		DEGRAD	10
		SEVERE	100
7	OFF	ERRORD	1
		DEGRAD	10
		SEVERE	100

Table A-9 Accumulator Configuration Template

Accumulator Input	Accumulator Channel Scanning	Threshold (Note)	Threshold Value
0		ERRORD	
		DEGRAD	
		SEVERE	
1		ERRORD	
		DEGRAD	
		SEVERE	
2		ERRORD	
		DEGRAD	
		SEVERE	
3		ERRORD	
		DEGRAD	
		SEVERE	
4		ERRORD	
		DEGRAD	
		SEVERE	
5		ERRORD	
		DEGRAD	
		SEVERE	
6		ERRORD	
		DEGRAD	
		SEVERE	
7		ERRORD	
		DEGRAD	
		SEVERE	

Note: The following are the threshold ranges:

- ERRORD (0 – 64998)
- DEGRAD (1 – 64999)
- SEVERE (2 – 65000)

errored seconds < degraded seconds < severely errored seconds

Westronic Systems, Inc.
a Mediation Technology company

Tel: 403-250-8304 | **Fax:** 403-263-2174
Technical Support: 403-250-8304
E-Mail: info@westronic.com

View Remote Alarm Monitoring and Management Products at:
http://www.westronic.com

200, 550 71 Avenue SE
Calgary, Alberta T2H 0S6 Canada

© 2007 Westronic Systems, Inc.
Printed in Canada